Front End Plans

Mohan Ramanathan
APS Upgrade Associate Project Manager
APS Engineering Support Division

Stakeholders Meeting
November 5, 2012

Outline

- Current Capabilities
- APS-U Scope
- Next Generation XBPM
- Front End Designs
- Costs
- Summary

Front Ends – Capabilities

Different types of insertion device front ends exist with varying capabilities

Existing Capabilities	Original ID FE v1.2 19 units	Undulator only FE v1.5 2 units ✔	Canted Undulator FE 7 units ✔	High Heat Load FE 3 units ✔
Source Parameters	One 2.4-m-long U3.3 at 11-mm gap, at 130 mA	One 2.4-m-long U3.3 at 11-mm gap, at 150 mA	Two canted 2.07-m-long, U3.3 at-11 mm gap, at 200 mA	Two inline U3.3 at 11-mm gap, at 180 mA
Total Power (kW)	6.9	8.9	20	21
Peak Power Density (kW/mrad^2)	198	245	281	590

- APS-U project goal is for all ID front ends to be capable of a minimum 150-mA operation with one insertion device
- With the exception of FE v1.2 all current front ends can handle 150-mA operation
- Based on beamline configuration FE v1.2 will be replaced with CUFE or HHLFE
- Rest of the FE v1.2 front ends will be renovated
- New ID front ends will be installed in three open locations

APS Upgrade Front Ends Scope Details

- APS has a total of 35 ID beam ports, 12 of them require no change due to the existing front ends that can operate at least 150 mA
- One front end (35-ID) is assigned to Dynamic Compression Sector (DCS) funded by National Nuclear Security Administration (NNSA) and is not in APS Upgrade scope
- Rest of the 22 front ends require either an upgrade or new front end

Quantity	Type of Front Ends	Description	Locations
7	FEv1.2R	FEv1.2 Retrofit	5-ID, 10-ID, 15-ID, 17-ID, 18-ID, 19-ID, 33-ID
7	HHL	New HHLFE with next generation XBPMs	3-ID, 4-ID, 7-ID, 8-ID, 11-ID, 14-ID 27-ID (unoccupied)
6	CU	New CUFE with next generation XBPMs	2-ID, 9-ID, 20-ID, 32-ID 25-ID (unoccupied) and 28-ID (unoccupied)
1	LSSCU	Long straight section CU for SCUs	1-ID
1	SPXCU	CUFE for SPX (large vertical aperture)	6-ID

Next Generation X-ray Beam Position Monitors

- **XBPM1(GRID-XBPM) and XBPM2**: Grazing-incidence surfaces intercepts the undulator beam outside of the central cone.
  - Pinhole cameras measure vertical beam position
  - Left-right absorbers measure horizontal position

- **IM1**: x-ray intensity monitor using XRF from the photon shutter
- **IM2**: x-ray intensity through exit mask using Compton scattered x-ray from Be window

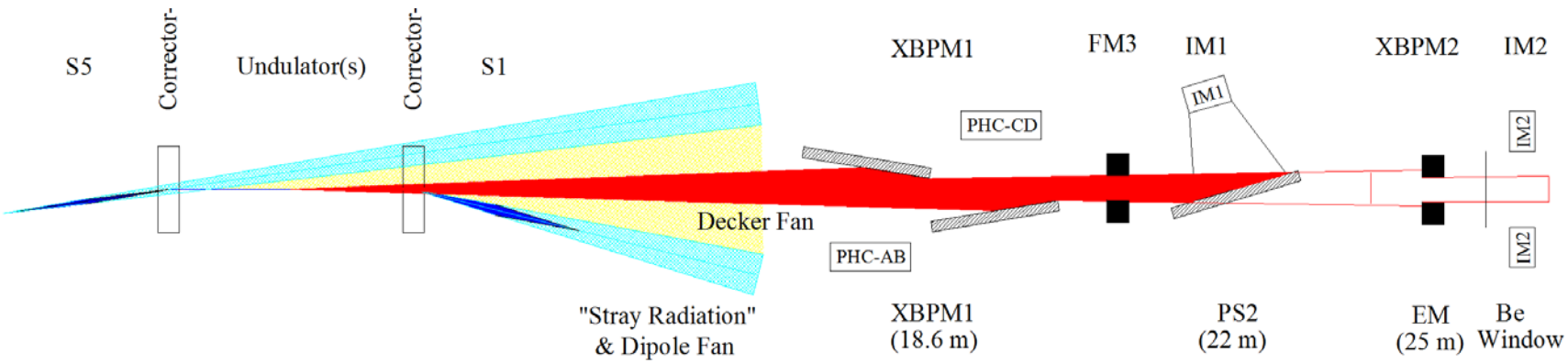

Grazing Incidence for Insertion Device X-ray Beam Position Monitor (GRID XBPM)

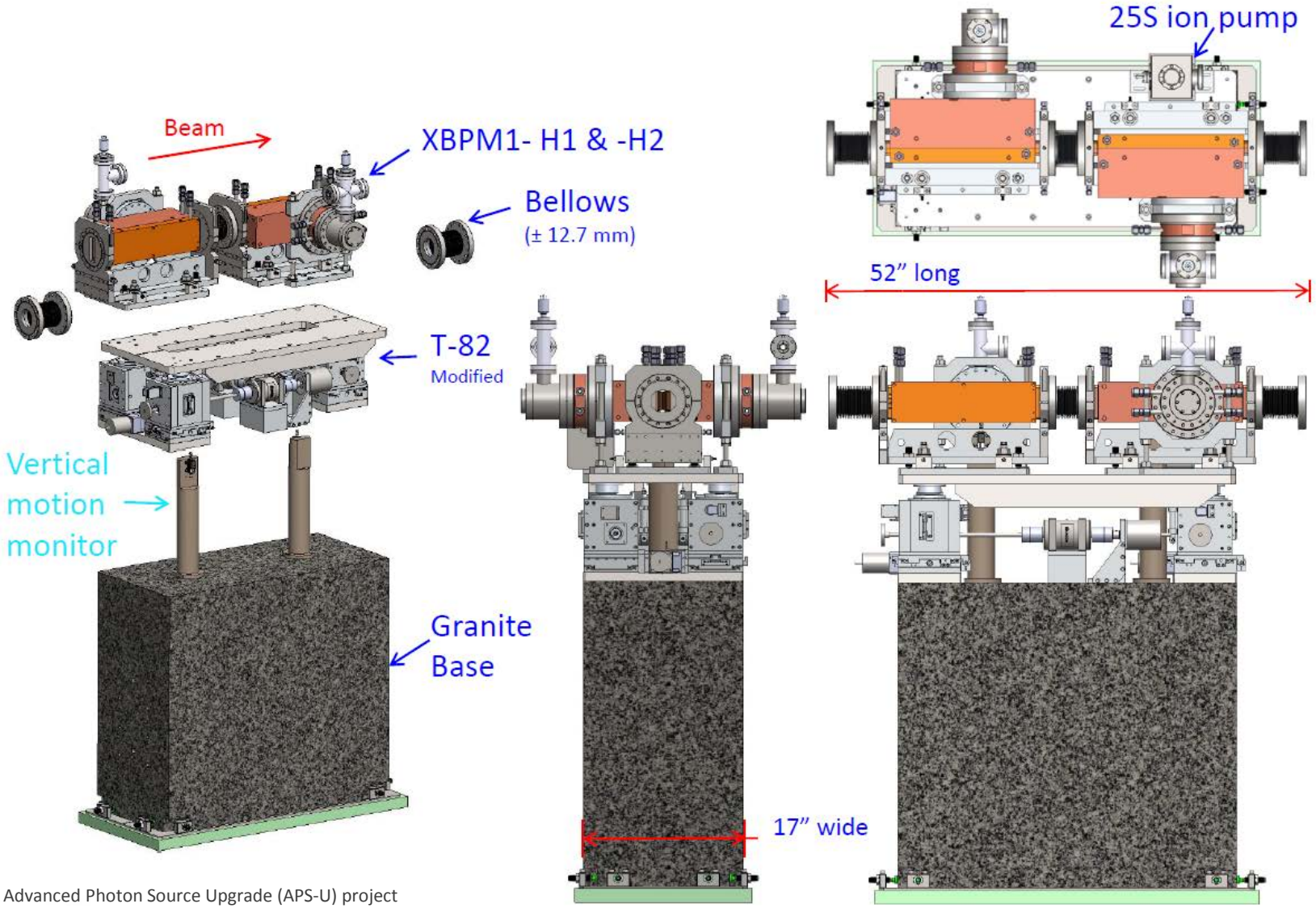

Intensity Monitor 1 (IM1)

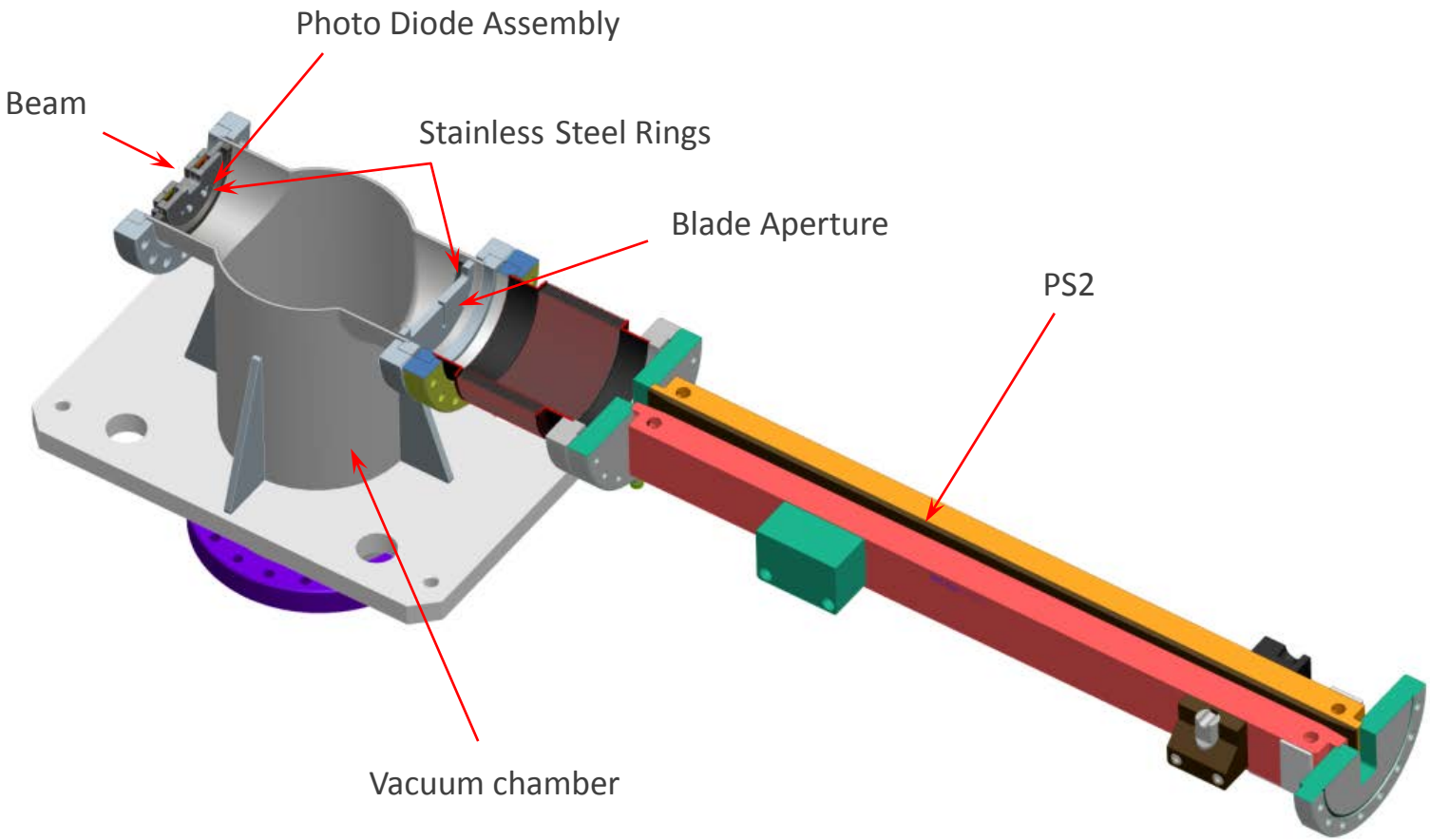

IM1 uses the fluorescence and Compton-scattered x-ray photons from Photon Shutter No. 2 (PS2) in the backward direction to measure x-ray flux

Second X-ray Beam Position Monitor (XBPM2)

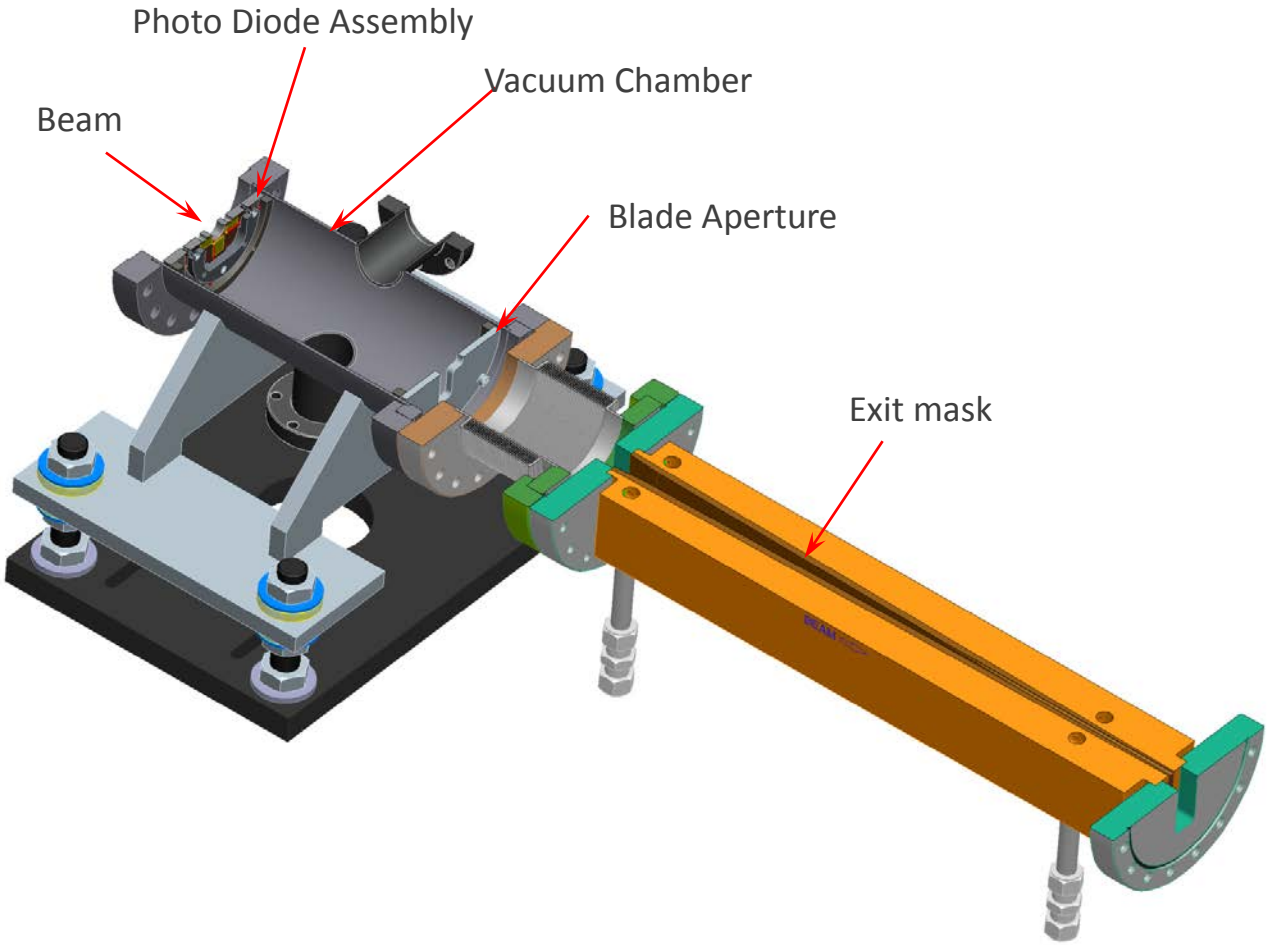

XBPM2 is based on the principle of the pinhole camera it uses fluorescence and Compton–scattering x-ray photons from the exit mask in the backward direction to measure x-ray flux.

Intensity Monitor 2 (IM2)

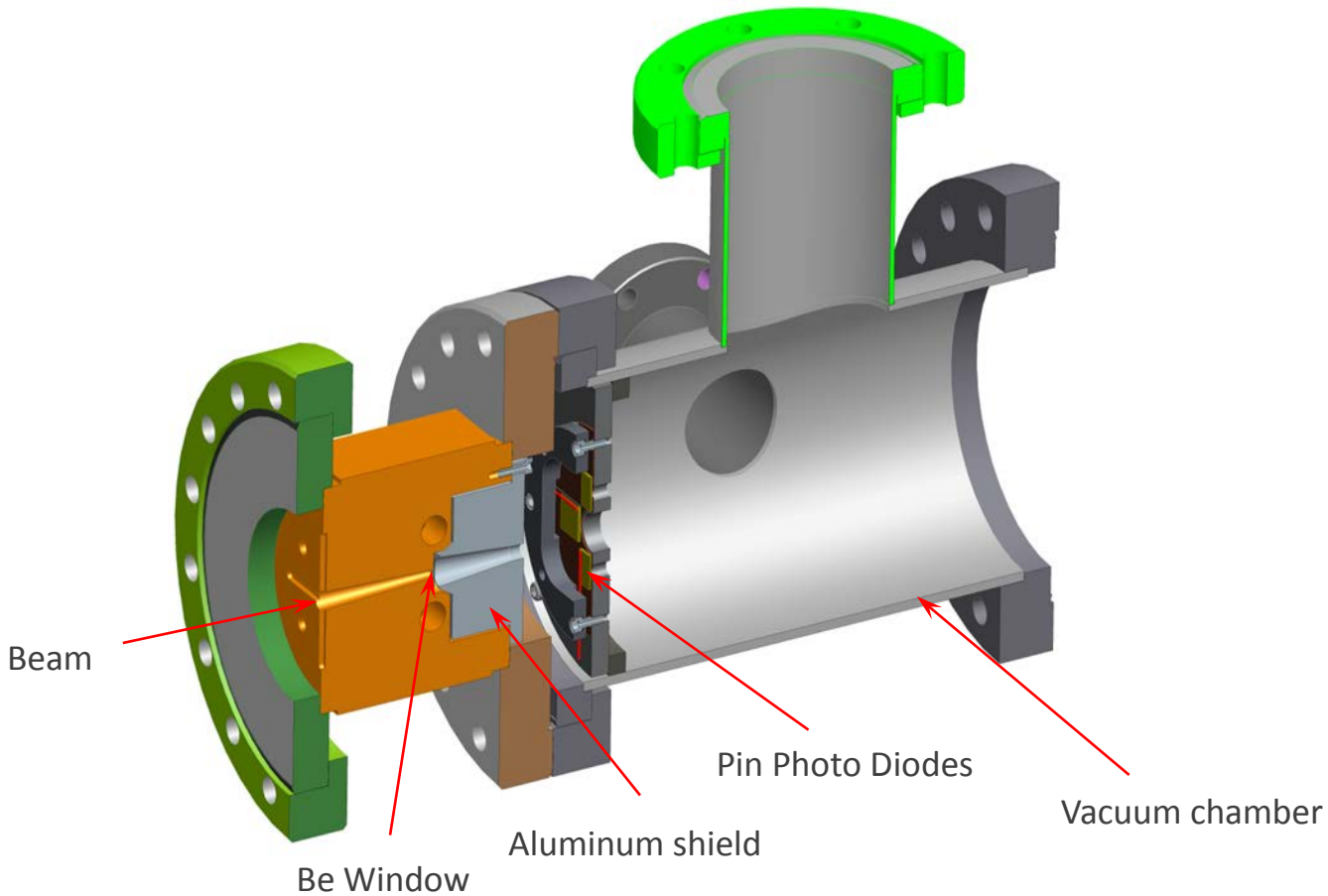

IM2 uses Compton-scattered x-ray photons in the forward direction from the front end beryllium window.

Design of New HHL Front End with Next Gen XBPMs

- The original HHLFE will be modified to accommodate the Next generation XBPMs
- The GRID XBPM requires:
  - About 1.4 m of space in the front end as close as possible to the source
  - Should be able to see the whole ID beam
  - Masks upstream of GRIX XBPM are only for mis-steered beams
- Based on GRID XBPM requirements:
  - Photon Shutter 1 (PS1) will be removed in order to fit in the GRID-XBPM
  - A Low Power Photon Shutter is added to protect to stop the residual bend magnet radiation.
  - EPS and PSS logics change due to new design
  - Masks (FM2 & FM3) are redesigned to meet aperture requirement of the next gen XBPM
- Next generation XBPM system consists of GRID-XBPM, Intensity Monitors 1 & 2 (IM1, IM2) and a second XBPM outside the ratchet wall (XBPM2)

High Heat Load Front End Comparison

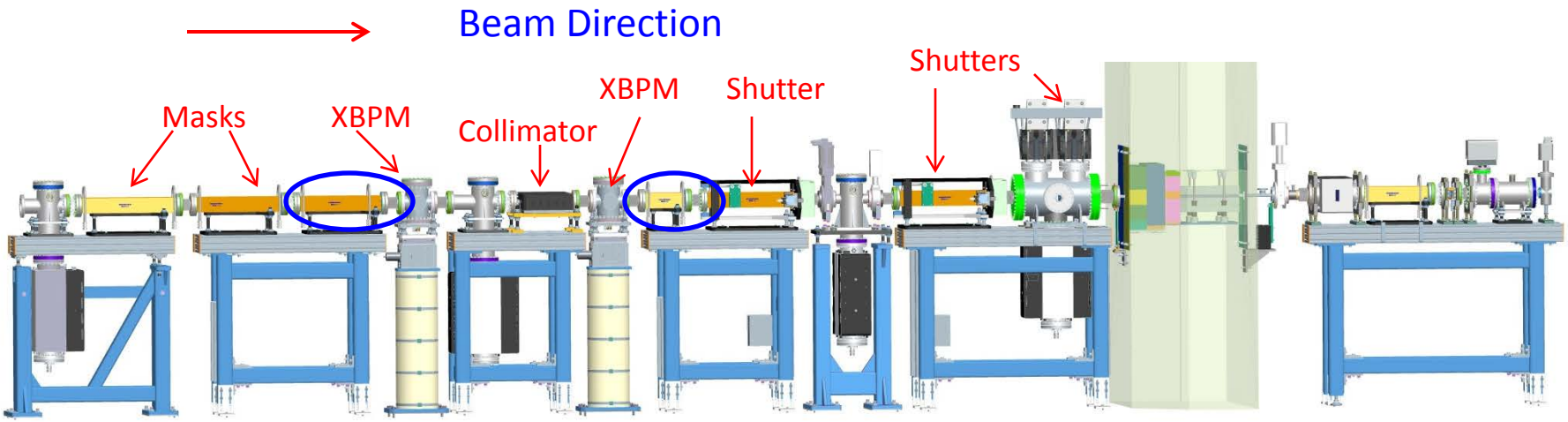

Existing HHL front end with conventional XBPM

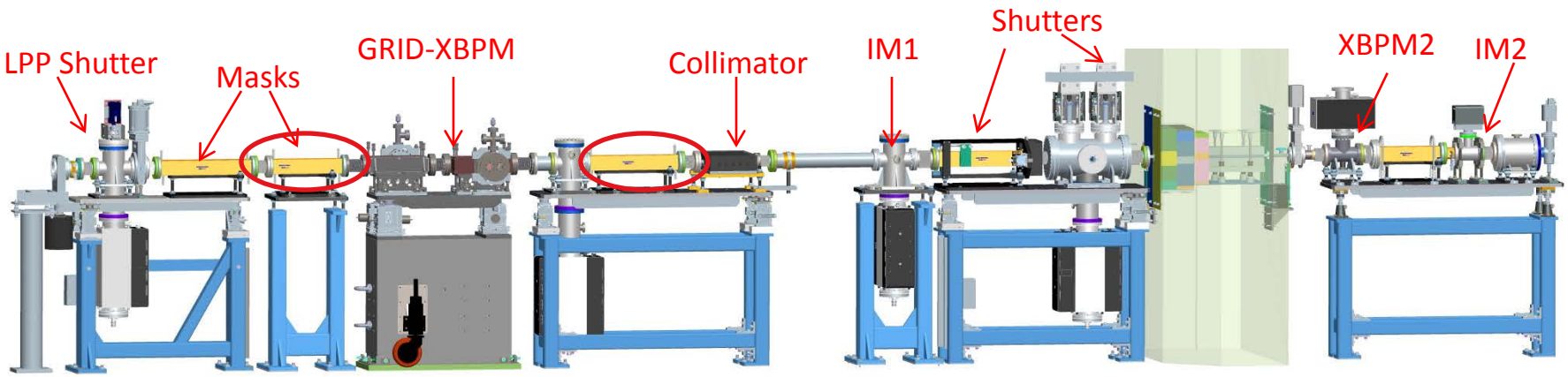

New HHL front end integrated with the Next Gen XBPM

Design of New CU Front End with Next Gen XBPMs

- The original CUFE was designed in 2003 and refined in 2008. Need to modify the design to accommodate the next generation XBPMs.
- The GRID XBPM requires:
  - About 1.4 m of space in the front end as close as possible to the source
  - Should be able to see the whole ID beam
  - Masks upstream of GRIX XBPM are only for mis-steered beams
- Based on GRID XBPM requirements:
  - Photon Shutter 1 (PS1) will be removed in order to fit in the GRID-XBPM
  - A Low Power Photon Shutter is added to protect to stop the residual bend magnet radiation.
  - EPS and PSS logics change due to new design
  - Mask (FM2) redesigned and mask (FM3) added to meet aperture requirement of the next gen XBPM
  - Change the support table design from two legs to four legs and standardize the pump size

Canted Undulator Front End Comparison

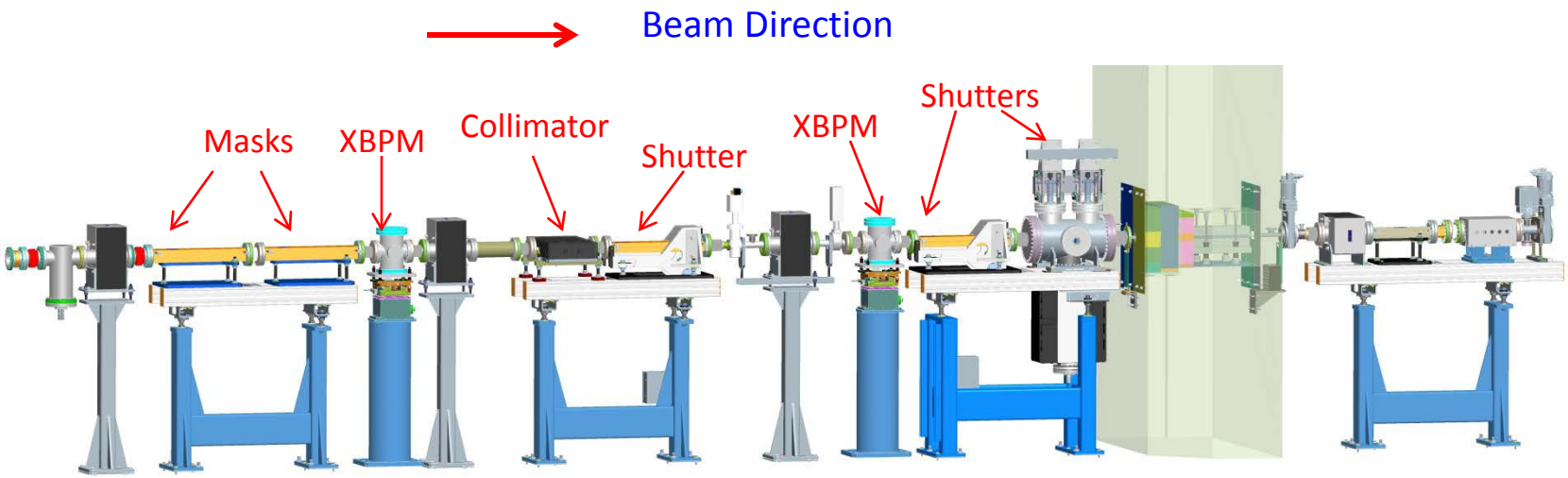

Existing Canted Undulator Front End

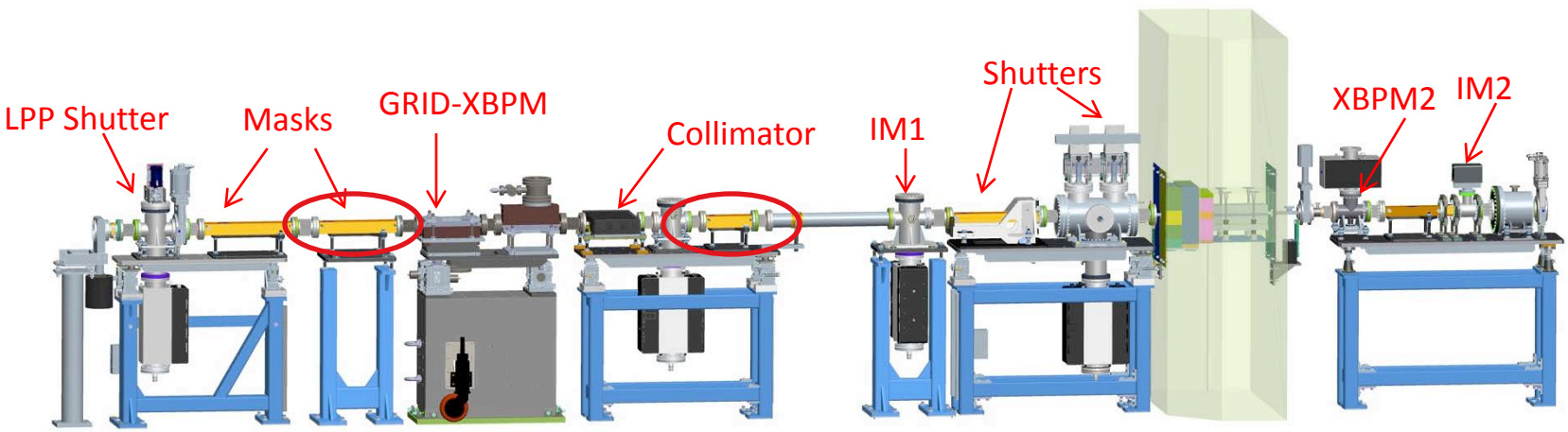

New Canted Undulator Front End with Next Generation XBPM

Front End Design – FEv1.2 Retrofit

- Perform least cost retrofit to allow operation with 150 mA. PS2 and FM1 can't handle 150 mA. PS1 has smaller beam incidence angle than PS2 and able to handle 150 mA once moved to PS2 location. Work scopes include:
  - Move PS1 to PS2 location, use PS1 as PS2, install LP Photon Shutter
  - Design a new FM1and support structure, replace several pumps

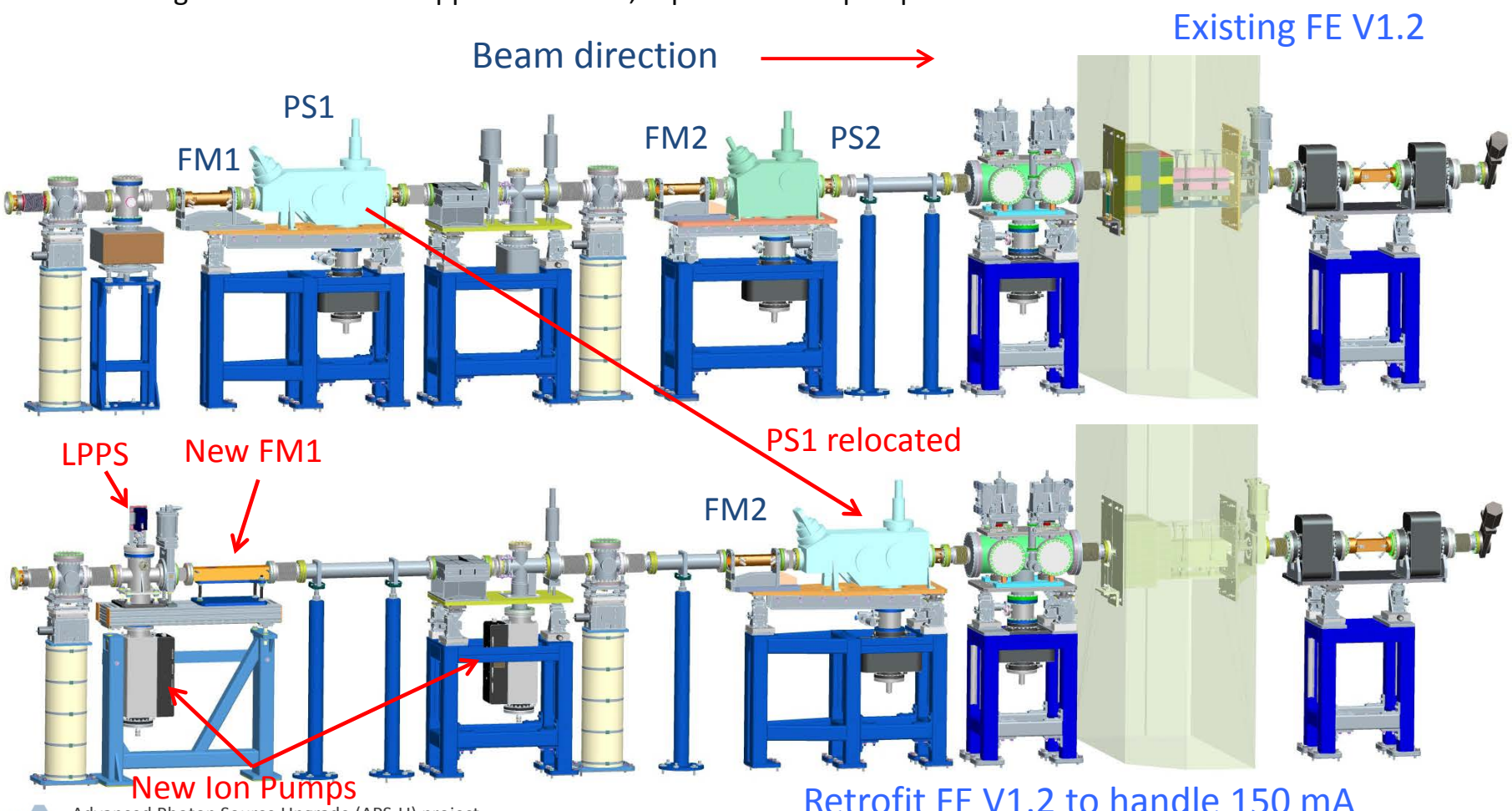

Costs

- Next Generation XBPM consists of GRID, IM1, IM2 and XBPM2
- Initial cost estimate (for HHL style) without labor:
  - *GRID XBPM* *$215K*
  - *IM1* *$7K*
  - *IM2* *$7K*
  - *XBPM2* *$7K*

- However to fit these into an existing HHL or CU front end requires extensive modification to the front end

HHL Front End Modification Costs

- Some hardware are salvageable:
  - Vacuum Hardware (pumps, controllers and gauges)
  - Photon Shutter 2 and Safety Shutter full table assembly
  - Wall collimator and lead collimator
  - Fixed Mask1 and exit mask
  - 3 out of 7 table bases are salvageable

- New items needed:
  - *FM2 and FM3* *$45K*
  - *LPPS2* *$14K*
  - *Exit Collimator* *$19K*
  - *Tables* *$35K*
  - *New slow valve* *$14K*

Total cost of FE components without labor $127 K

CU Front End Modification Costs

- Some hardware are salvageable:
  - Vacuum Hardware (some Ion pumps, controllers and gauges)
  - Photon Shutter 2 and Safety Shutter full table assembly
  - Wall collimator and lead collimator
  - Fixed Mask 1 and exit mask
  - 1 out of 4 table bases are salvageable

- New items needed:
  - *FM2 and FM3* *$41K*
  - *LPPS2* *$14K*
  - *Exit Collimator* *$27K*
  - *Tables* *$40K*
  - *New slow valve* *$14K*
  - *New Ion Pumps* *$36K*

Total cost of FE components without labor $172 K

Summary

- Initial Costs provided here are only an estimate based on the differences between existing design and the new designs
- More work is needed to refine the design to see if there are possibilities for more salvage of existing components
- Design of Canted Undulator Next generation XBPM is in refinement and is not proven yet!
- If new design second XBPM (based on similar principle to GRID) is found to be effective, it will be a low cost option for existing front end modifications
- Expect early results in 2014 to provide better answers