(E)	PLOT SCALE: 1=2	DWG. SCALE: 2	A1295702

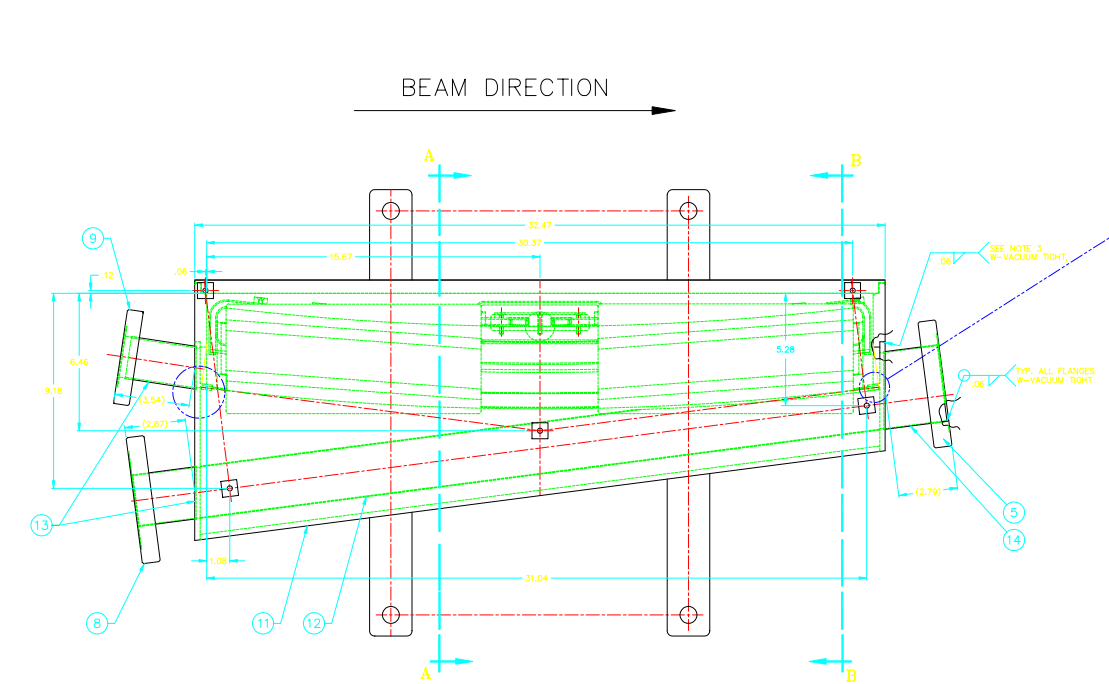

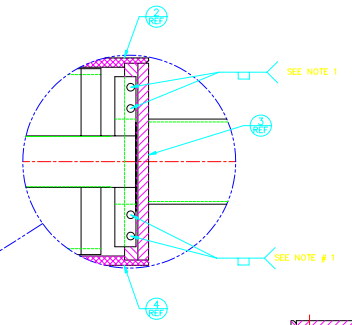

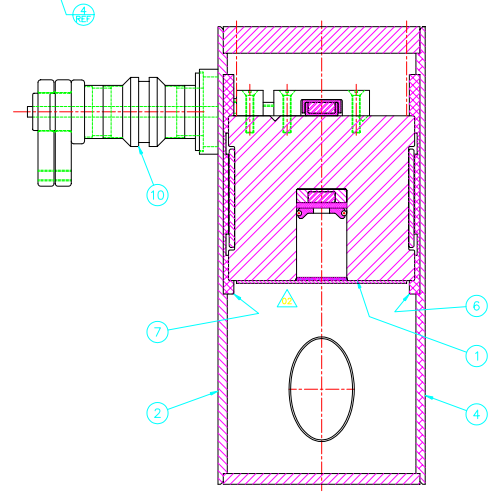

SECTION A – A

SCALE 2:1

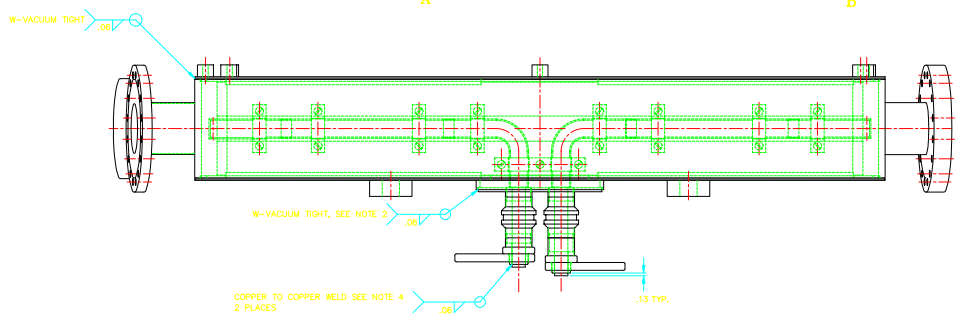

NOTES:

1.) START THE ASSEMBLY BY APPLYING ITEM 1 TO ITEM 2, MAKE SURE ITEM'S 6 & 7 ARE UNDER ITEM 1, THEN BRAZE THE SEPTUM CONDUCTOR TO THE ENDPLATE – BOTH ENDS OF SEPTUM

2.) THEN WELD ITEM 10 TO FLANGE OF ITEM 2 HOUSING ASSY.

3.) START TACK WELD AT TOP OF SEAM BETWEEN ITEMS 2 & 3 CONTINUE DOWN, AROUND AND BACKUP SEAM AT OPPOSITE END, THEN COMPLETE WELD.

4.) PERFORM COPPER TO COPPER WELD ALL AROUND. TYPICAL 2 PLACES. AND ONLY AFTER ITEM 10 HAS BEEN WELDED INTO PLACE.

5.) THEN CUT COPPER LEADS TO DIMENSION SHOWN.

6.) VACUUM LEAK CHECK AFTER WELDING ITEMS 2 & 4.

7.) WELD ITEMS 5, 8 & 9 (MOD. FLANGES) ON AFTER ALL OTHER ASSEMBLY WORK HAS BEEN COMPLETELY WELDED.

8.) VACUUM LEAK CHECK FINISHED MAGNET PER SPEC..

9.) FOR ADDITIONAL ASSEMBLY PROCEDURE SEE SPECIFICATION NO. 220104–XXXXXX

VACUUM SPECIFICATIONS REQUIREMENTS

ALL WELD JOINTS TO BE LEAK TIGHT. LEAK TEST, USING A LEAK DETECTOR HAVING A SENSITIVITY OF 1×10^{-10} ATM. CC/SEC. HELIUM.

ELECTRICAL RESISTANCE VALUES FOR

Ls = 2.49 μH
R = .36mΩ
Q = 8.4
Cp = 10.2 μF

HI POT AT 2 KVDC ≤ 5μA

ESTMATED WT. 275 LBS.

1 SOURCE:
MIDWEST VACUUM
201 EAST OGDEN AVE. SUITE 15
HINSDALE, IL. 60521
(708) 323–5399

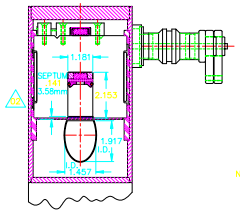

SECTION B – B

NOT USED
3

INJECTOR SYNCHROTRON
INJECTION SEPTUM MAGNET
GENERAL ASSEMBLY
220104–700000–02 A1295702

ITEM	DWG/PART NUMBER	NOMENCLATURE OR DESCRIPTION	MATERIAL / SPEC	QTY
14	250104–730200	EXTENSION TUBE PLATE ASSEMBLY	SEE DRAWING	1
13	250104–730100	I.S.R. & L.E.T. TUBE PLATE ASSEMBLY	SEE DRAWING	1
12	250104–730004	BEAM TUBE	SEE DRAWING	1
11	250104–730001	SIDE PLATE	SEE DRAWING	1
10	250104–730000	FEEDTHROUGH ASSY.	SEE DRAWING	1
9	450–200R	#4.50 CF ROTATABLE FLANGE NOR–CAL	PURCHASE	1
8	220302–100042	#6.00 MODIFIED FLANGE	SEE DETAIL	1
7	220104–700004	INSULATION PLATE	SEE DETAIL	2
6	220104–700003	INSULATION PLATE	SEE DETAIL	2
5	220104–700002	#6.00 MODIFIED FLANGE	SEE DETAIL	1
4	220104–700101	TOP PLATE SUB–ASSY.	SEE DRAWING	1
3				
2	220104–720000	HOUSING ASSY.	SEE DRAWING	1
1	220104–710000	CORE SUB–ASSY.	SEE DRAWING	1

PARTS LIST

DM	CHANGE DESCRIPTION	BY	CHKD	DATE
01	SEE DCN NO. 951106–03	CRP		11/6/95

REVISIONS

UNLESS OTHERWISE SPECIFIED: ALL DIMENSIONS ARE IN INCHES
TOLERANCES
DECIMALS ANGULAR
.X ±.4 ±.50°
.XX ±.05
.XXX ±.015
SURFACE ROUGHNESS 125

MATERIAL IN ALL PARTS MUST BE FREE FROM ROHS & ITSR
SURFACE REFINISH TO BE IN ACCORDANCE WITH CURRENT SPEC.
PROCESSING & TREATMENTS TO BE IN ACCORDANCE WITH CURRENT SPEC.

DO NOT SCALE FROM DRAWING

LOG NUMBER A1295702
DRAWN BY G.CHERRY DATE 2-6-94
CHECKED BY S. REEVES 12/94
DESIGNED BY G.CHERRY 12/94
APPROVED BY S. REEVES 12/94
MATERIAL SEE PARTS LIST
SCALE 1:2
SHEET 1 of 1
SIZE E

THIS DRAWING IS THE PROPERTY OF ARGONNE NATIONAL LABORATORY

PROJECT NO.
PROJECT MGR.
APPROVED/RELEASED

TITLE
ADVANCED PHOTON SOURCE
INJECTOR SYNCHROTRON
INJECTION SEPTUM MAGNET
FINAL ASSEMBLY

DRAWING NUMBER 220104–700000–02