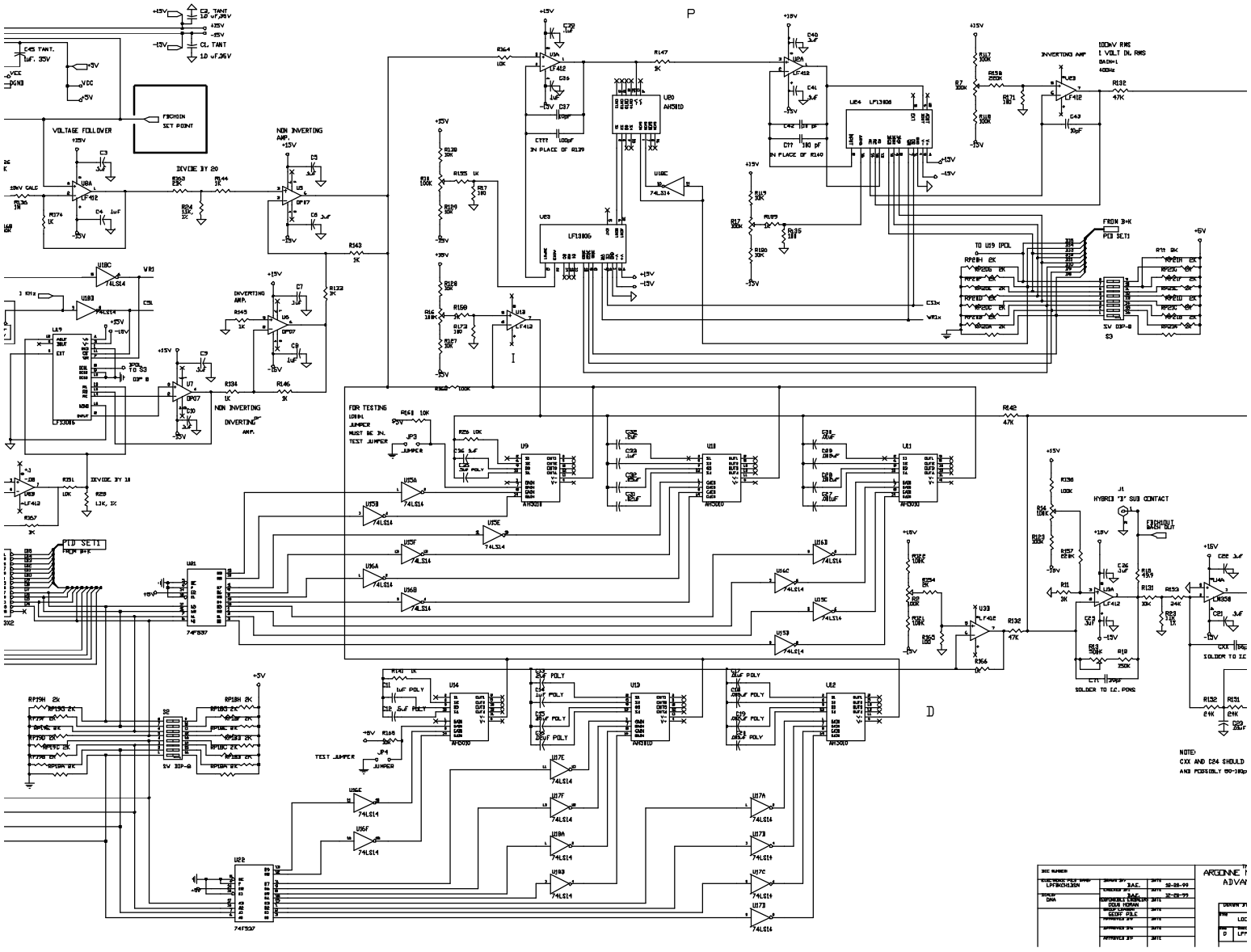

P
I
D
VOLTAGE FOLLOWER
DIVIDE BY 20
NON INVERTING AMP.
INVERTING AMP.
FOR TESTING
JUMPER
MUST BE IN.
TEST JUMPER
PID SET1
HYBRID "D" SUB CONTACT
FROM B+K
TO U19 IPOL
FROM B+K
PID SET1
SOLDER TO I.C. PINS
NOTE:
CXX AND C24 SHOULD
ARGONNE
ADVAN