RF TECHNICAL NOTE

Measurement of 352-MHz RF Source Frequency

D. Horan

2/9/09

I. Introduction

Measurement of the 352-MHz main rf source frequency is accomplished on a routine basis by monitoring the source signal with a dedicated frequency counter. However, frequency measurement to less than 10Hz with a standard frequency counter requires an extremely stable and accurate reference signal and careful attention to the level of the signal to be measured. This technical note describes the APS 352-MHz rf source generation system, the use of two separate 10-MHz reference sources for the rf synthesizers and frequency counter, and the method for verifying 10-MHz reference source frequency.

II. The 352-MHz RF Synthesizers and 10-MHz Reference Sources

Figure #1 and Figure #2 below show details of the 352-MHz rf source generation system. Two separate 352-MHz synthesizers are supplied an external 10-MHz timebase reference signal from a 10-MHz oven-controlled crystal oscillator (OCXO) source with multiple outputs.

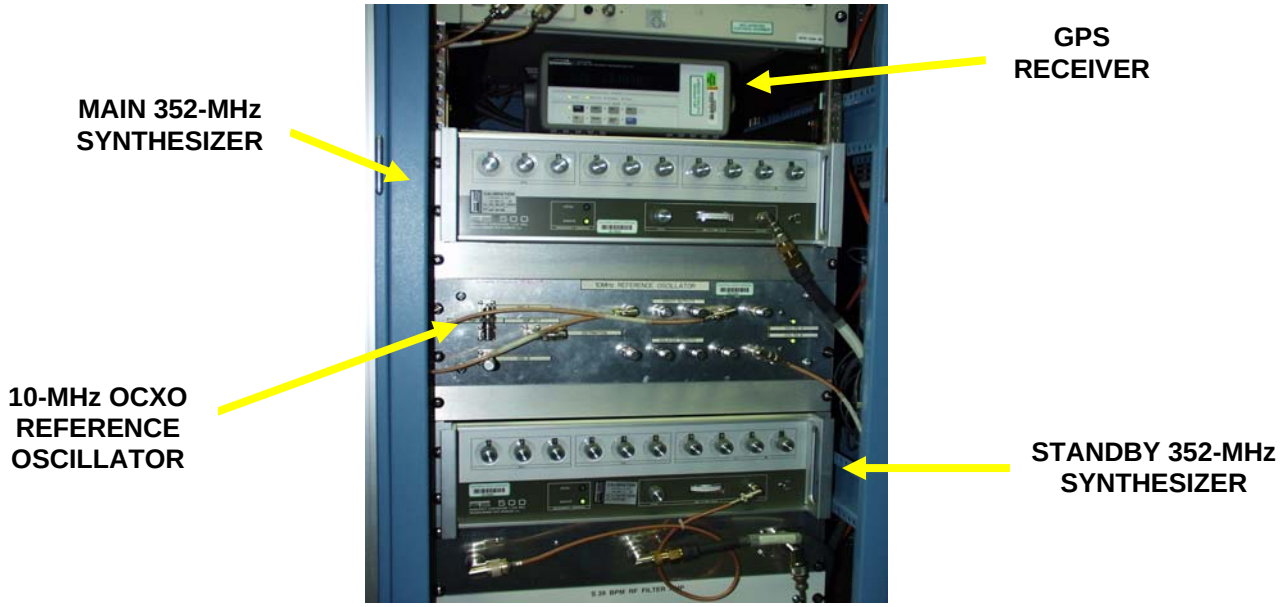

Figure 1: Photo of rf source equipment in A014/rack #7.

Both synthesizers are connected to the network utilizing a GPIB interface and are commanded by EPICS control to be at the same frequency. The outputs of the synthesizers are fed to a 352-MHz source select switcher that is used to perform a manual switch between the two synthesizers if one should fail.

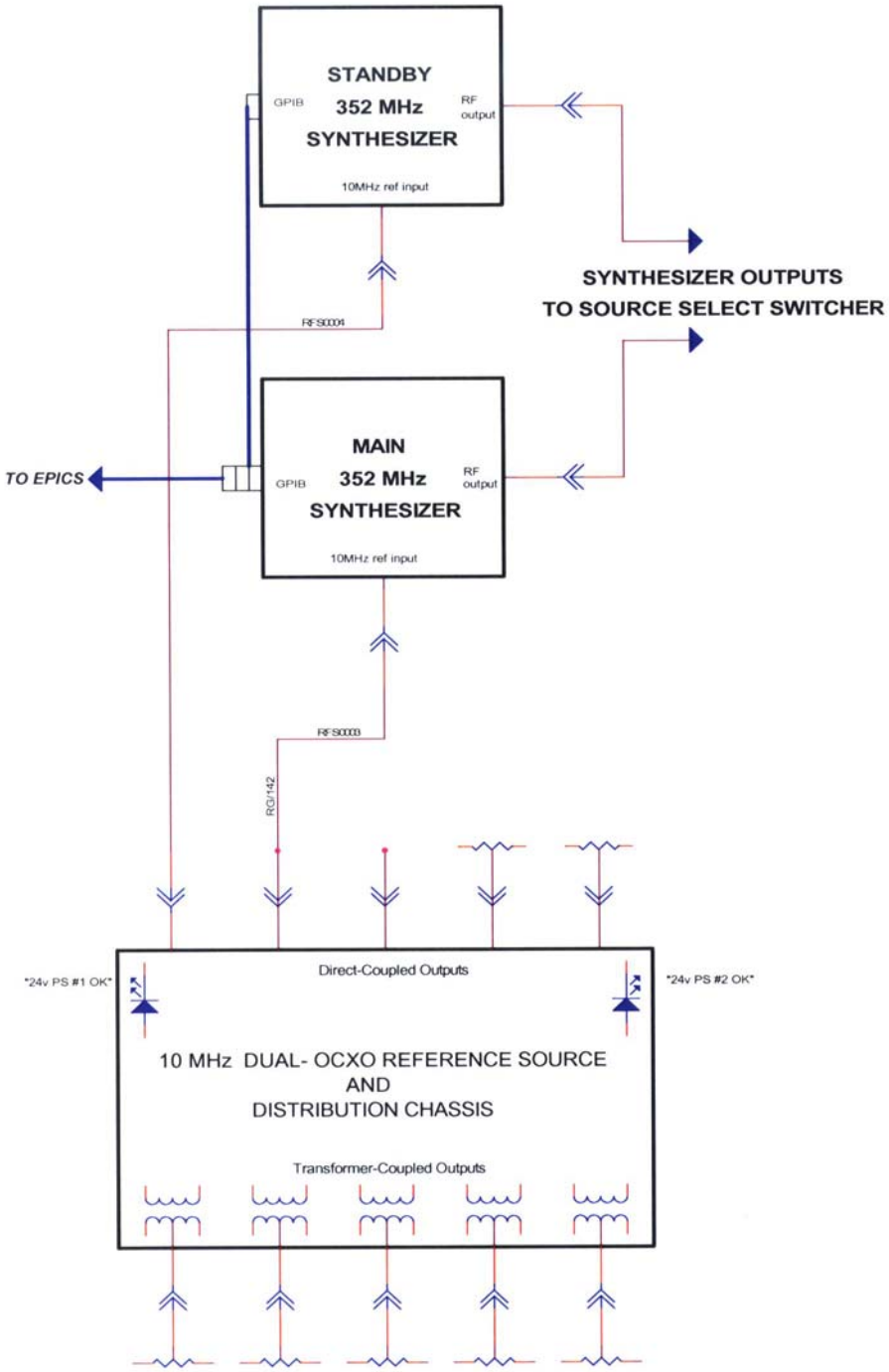

Figure 2: Details of 352-MHz rf source generation.

Both synthesizers are supplied an external 10-MHz timebase reference signal from an OCXO source that provides superior long and short-term frequency stability and low phase noise.

III. Source Frequency Measurement Using the Frequency Counter

A standard frequency counter (see Figure 3) is used to monitor the output frequency of the 352-MHz synthesizer that is selected by the rf source switcher. The frequency readback is fed to EPICS by a GPIB connection. The details of the frequency counter system are shown Figure 4.

Figure 3: Frequency counter in A014/rack #9.

The frequency counter is supplied an external 10-MHz timebase that is generated by a Global Positioning System (GPS) receiver, which is located in A014/rack 7. The frequency accuracy of the GPS receiver 10-MHz output is far superior to that of the OCXO when the receiver is locked onto the GPS satellite system, and therefore is used as the frequency counter timebase to provide a reference that is superior in stability and totally independent from the reference used by the synthesizers. The 10-MHz output of the GPS receiver is fed to the input of a distribution amplifier to provide multiple buffered outputs for other uses.

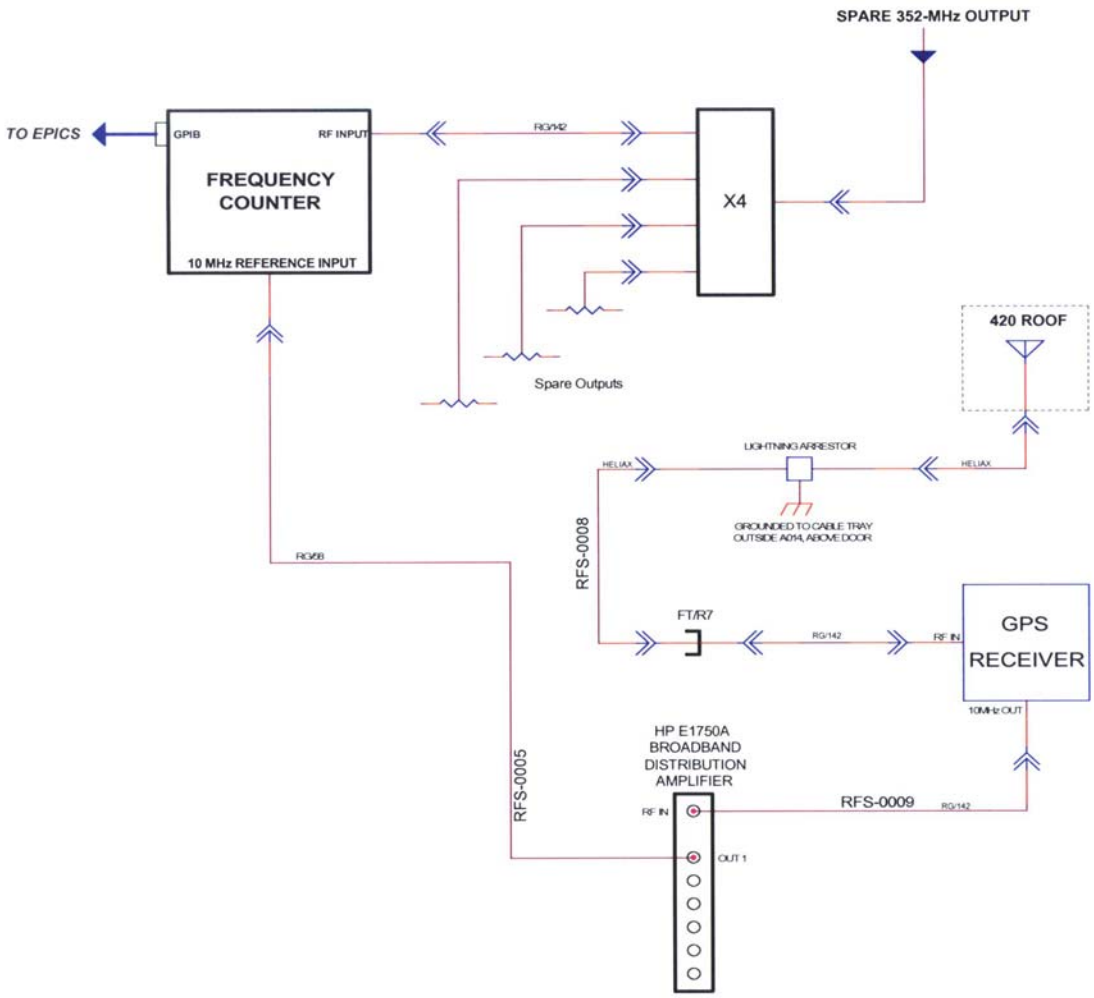

Figure 4: Frequency counter system in A014/rack #9.

Figure 5: GPS receiver located in A014/rack #7.

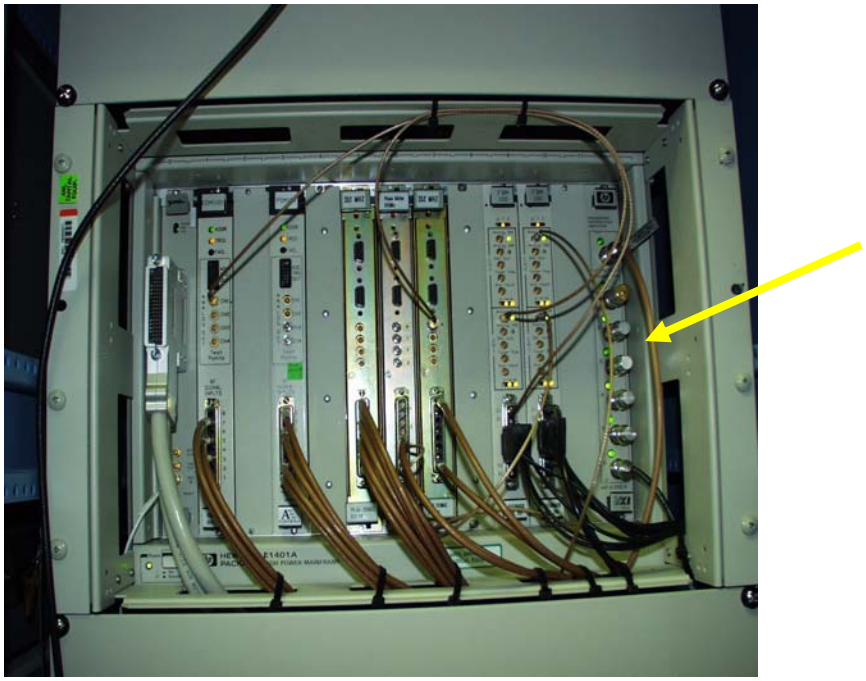

Figure 6: 10-MHz distribution amplifier in RF Source VXI crate (A014/rack #9).

IV. 10-MHz OCXO Frequency Measurement and Calibration

To insure correct output frequency from both 352-MHz synthesizers, the following procedure is followed:

1. Synthesizers are returned to factory for calibration every two years.

2. The output frequency of both 10-MHz OCXO sources is checked using the GPS receiver 10-MHz timebase as a reference.

Because the frequency difference between the OCXO and GPS 10-MHz signals is normally very slight (typically less than 0.1Hz), the frequency can be measured to sufficient accuracy using a standard oscilloscope, as shown in Figure 7. The GPS 10-MHz reference signal is connected to channel one, the OCXO signal to be measured is connected to channel two, and the scope is set to trigger on channel one. By measuring the time it takes for the OCXO signal to move through 360º of the GPS signal, the frequency error in degrees/second can be derived. If either OCXO frequency is found to be more than 0.10Hz off, the individual OCXO units can be manually adjusted to exactly match the GPS 10-MHz frequency. A logbook record of such a frequency measurement is shown in Figure 8.

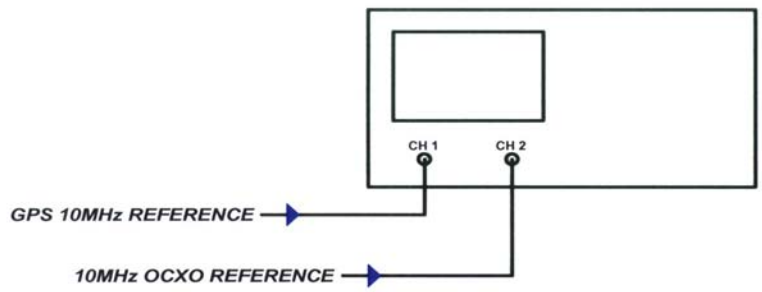

Figure 7: Oscilloscope frequency measurement.

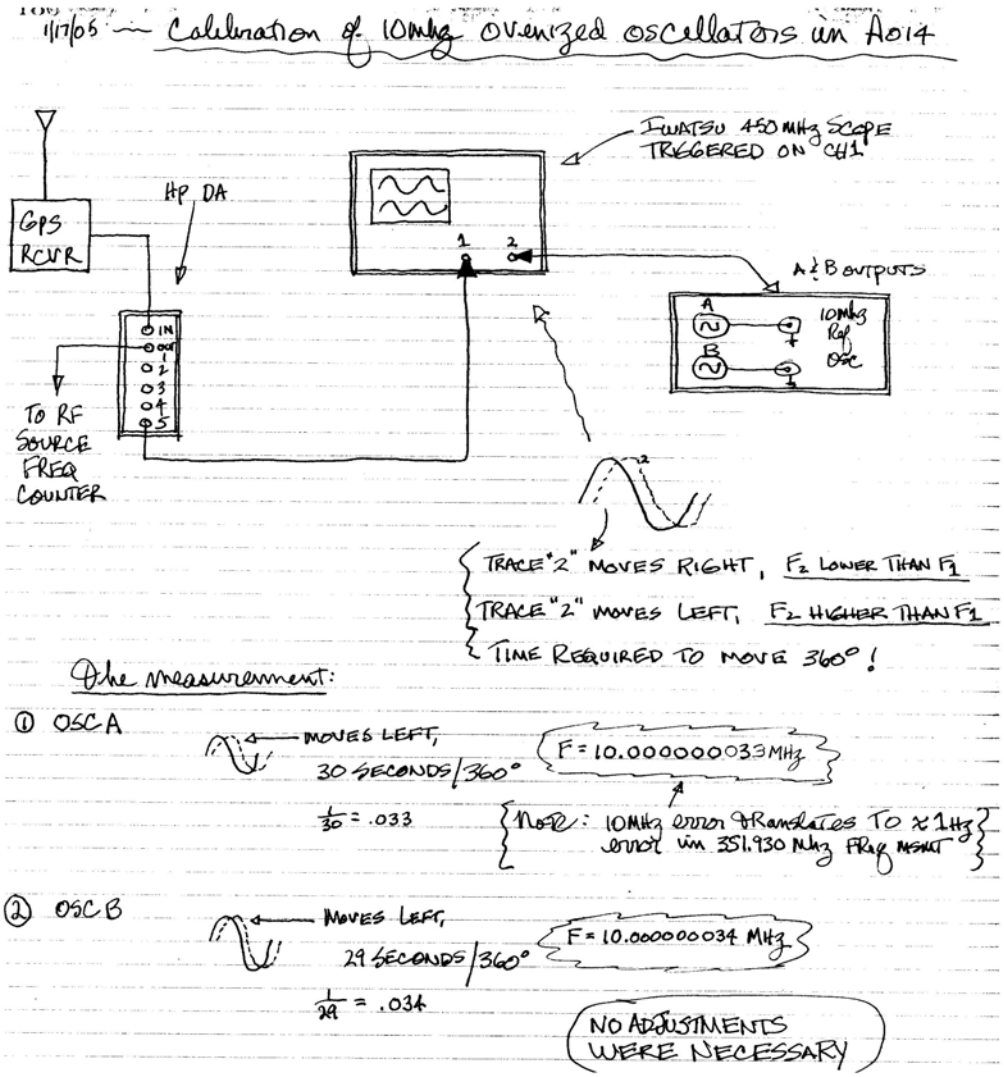

Figure 8: Notebook entry of 10-MHz frequency measurement.

A more recent frequency measurement on the OCXO units made on 5/20/08 revealed similar results. Oscillator A measured 0.017Hz high, and oscillator B measured 0.035Hz high. In both cases, no adjustment of the OCXO frequency was deemed necessary.