Current 540 MHz SR Damper

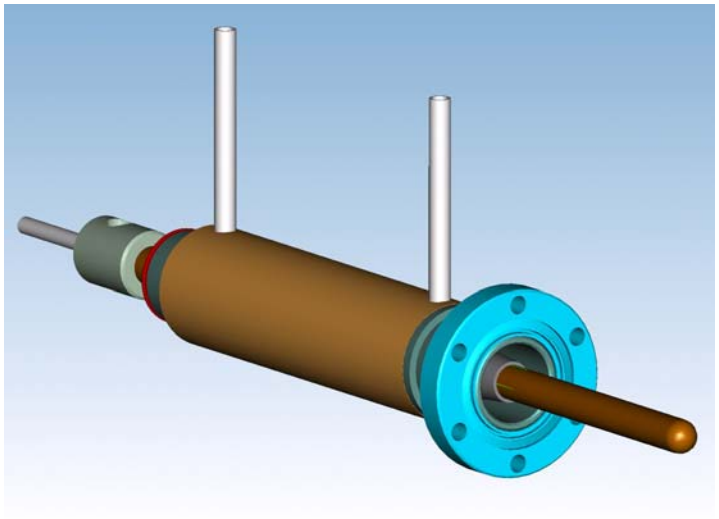

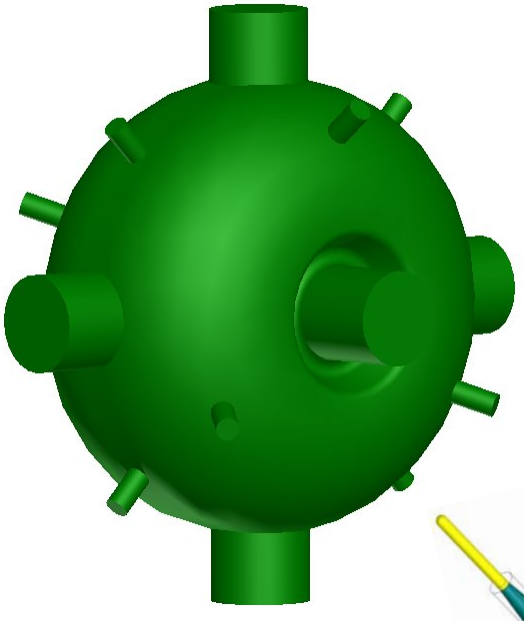

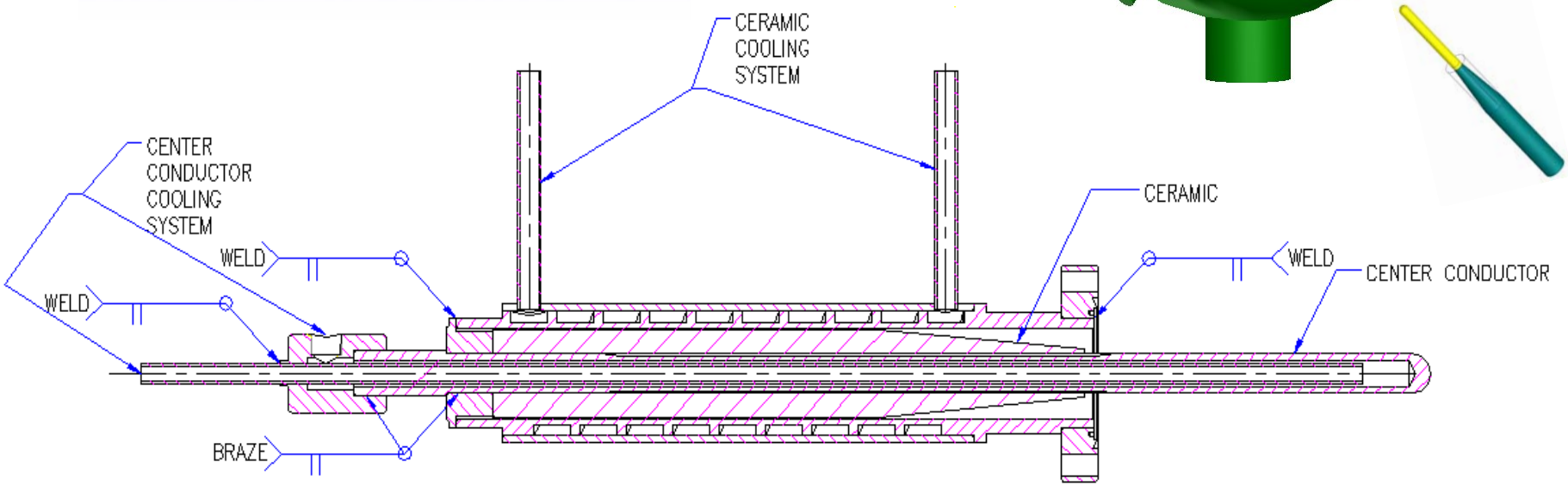

540 MHz Low Power Tests (Current Damper)

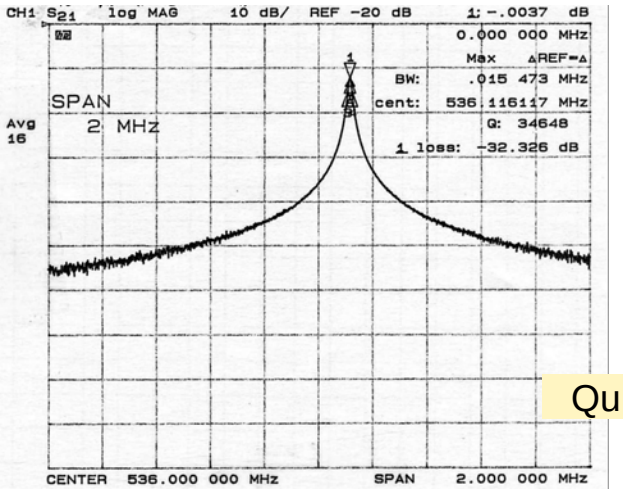

Qu ~ 40k

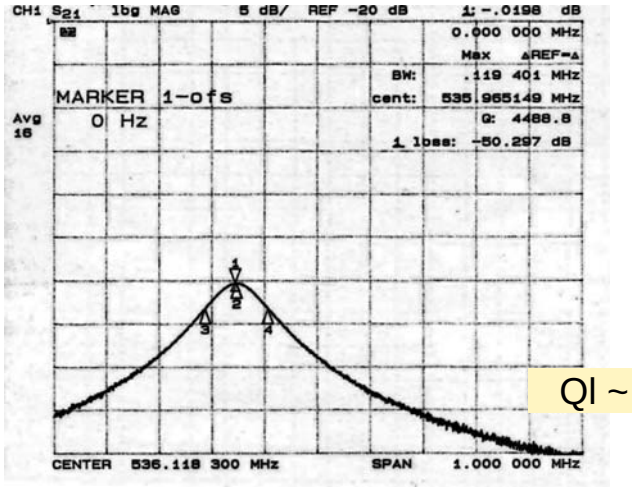

Ql ~ 5k

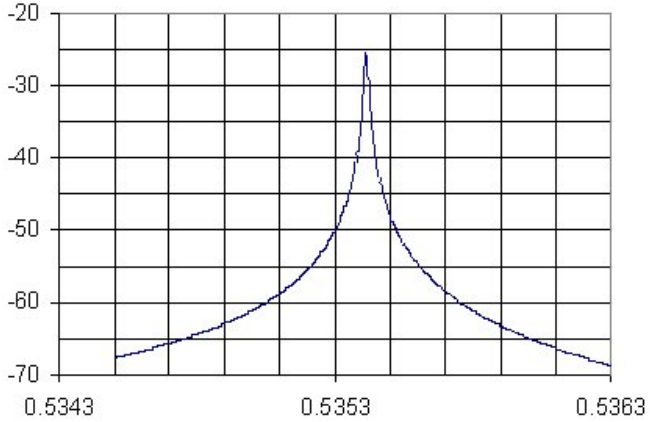

S21 without dampers

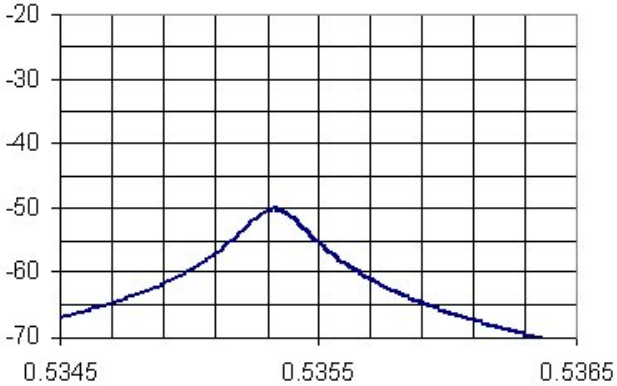

S21 with dampers fully inserted

Redesigned Damper Mechanical Construction

- Damper redesigned for generic operation at multiple frequencies.
- Diagnostics added for power levels and frequency.

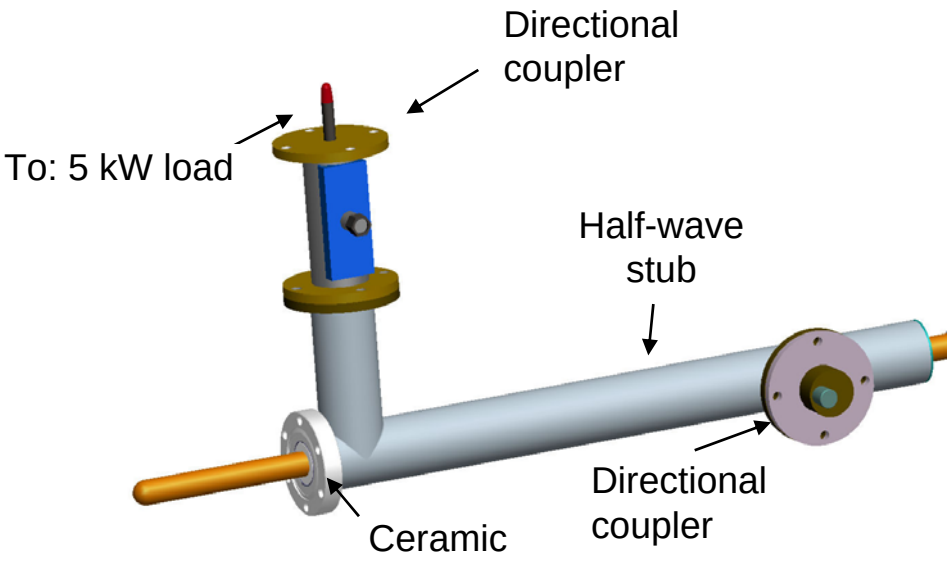

- Short on half-wave stub will be brazed after low power test to maximize fundamental rejection to the load.

- Water cooling channel runs through central coax line.
- Load coax line will likely be cooled with forced air.

Damper Diagnostics

- Directional coupler along the rf load line determines power level and frequency content going to the rf load
- Directional coupler along the half wave stub
  - Determine fundamental SW power levels
  - Evaluate HOM SW component (“trapped HOM’s”)
  - Tool for determining causes of increased heating during operation
- Couplers attach via flanges and can be exchanged for different frequency bandwidth

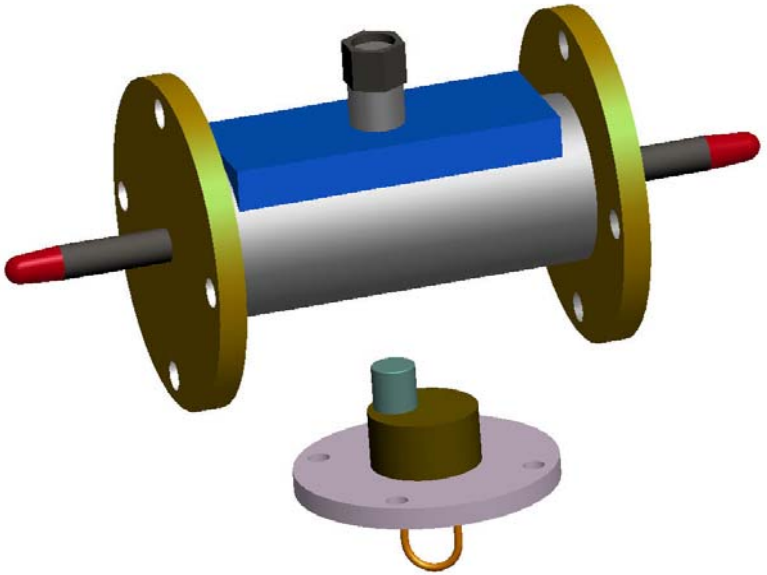

- RF load is detachable.
- Damper can be effectively “turned off” by shorting the coaxial load transmission line.

Stub Optimization

- Stub filter optimized to minimize transmission loss into load at fundamental frequency.
- Optimal total damper length found to reduce power loss at rf load

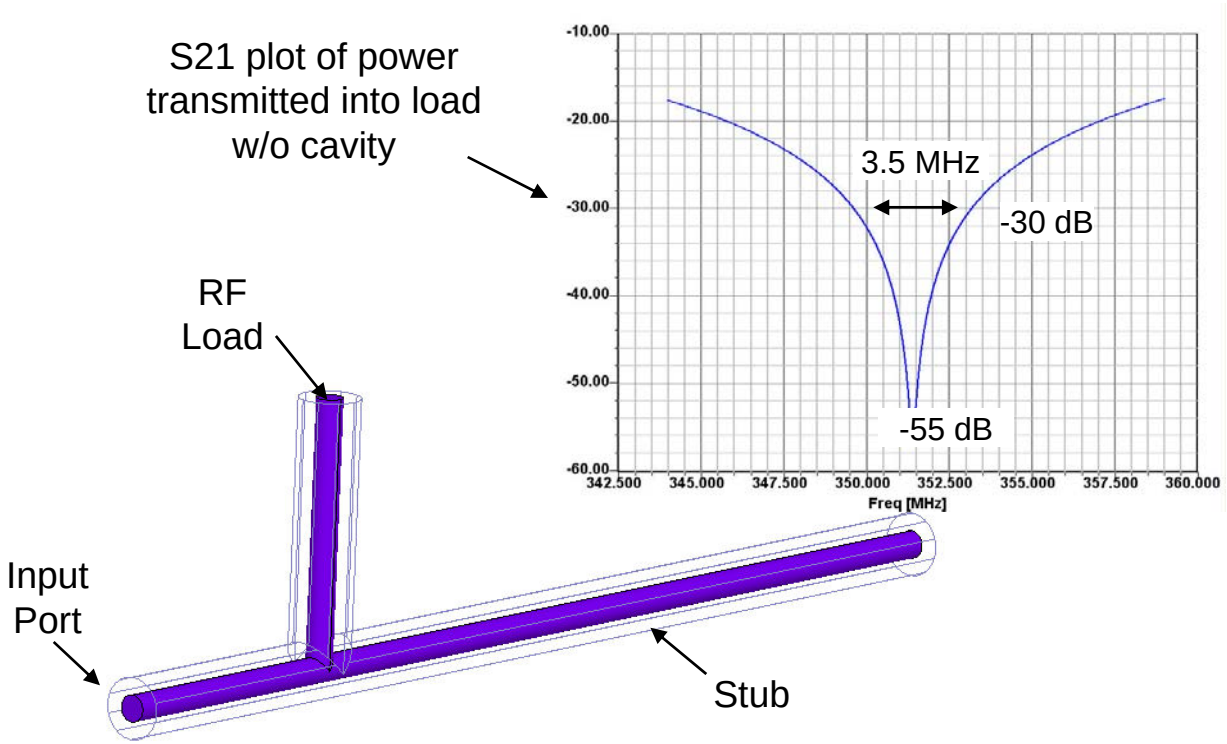

Power Loss: Compact Design

- Compact design with ceramic located in flange as close as possible to a voltage minimum.
- Total length of damper is 23.25 in. Length from flange to short is 18.7 in.

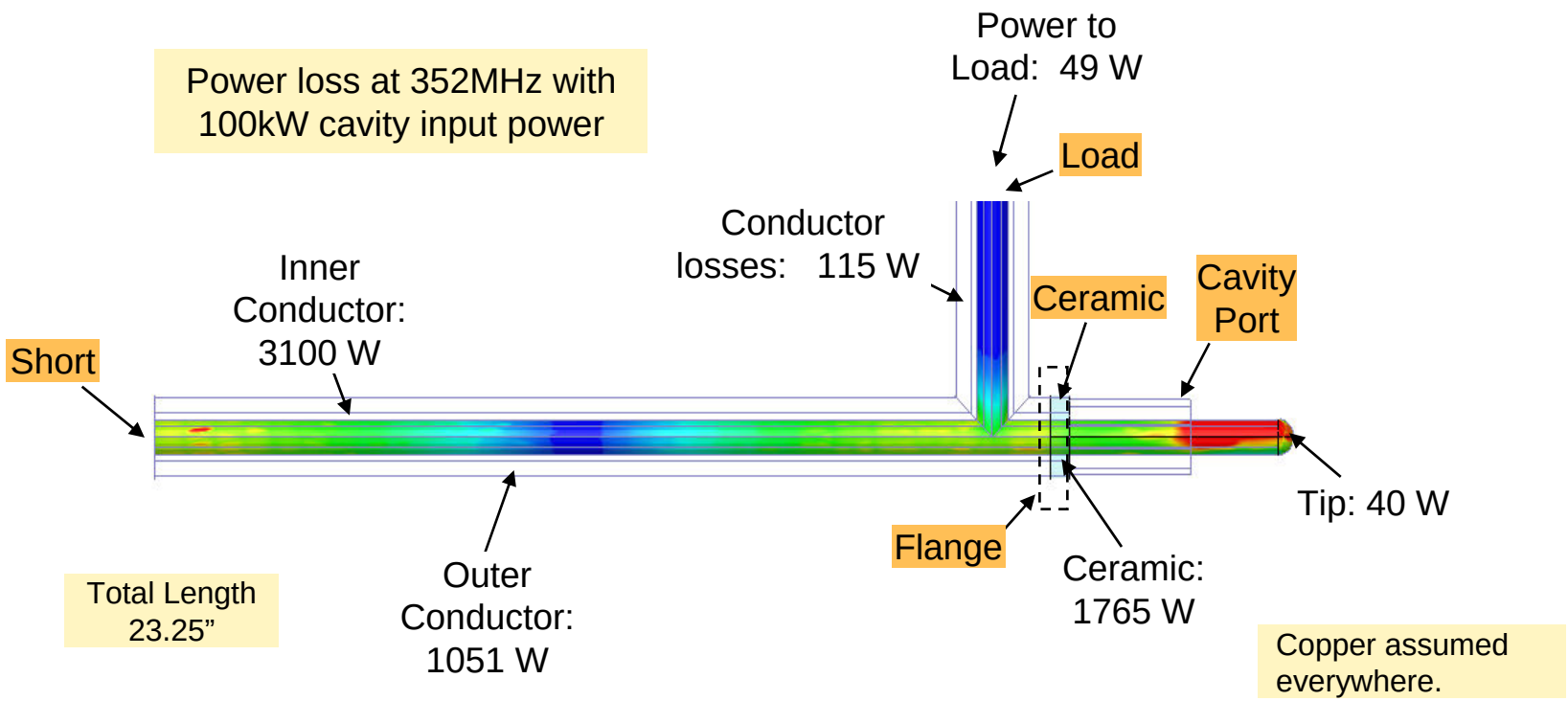

Power Loss: Optimized Design

- Design reduced SW in damper while minimizing length.
- Total length of damper is 28.3 in. Length from flange to short is 23.8 in.

Power loss at 352MHz with 100kW cavity input power

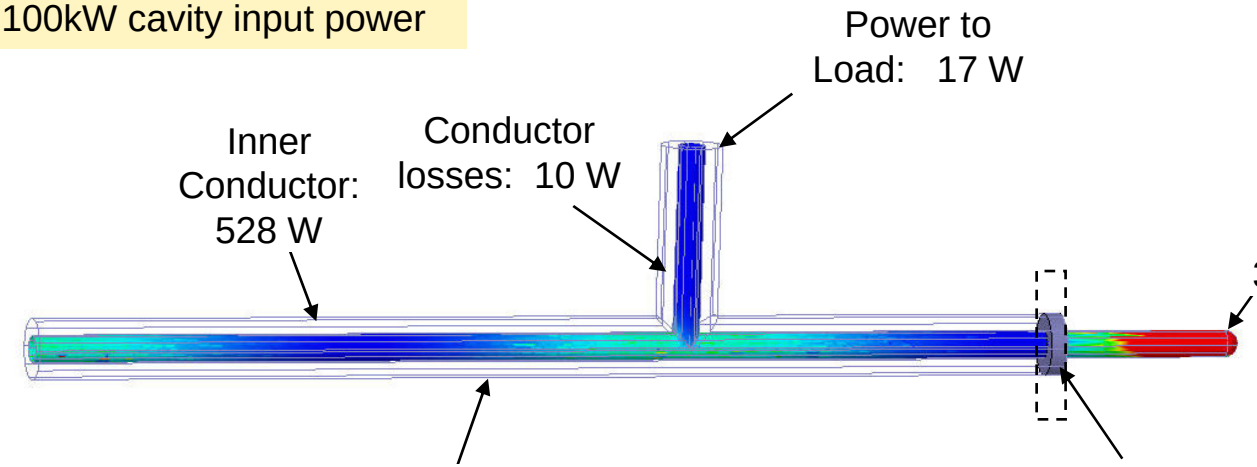

Total Length 28.3472”

Copper assumed everywhere.

Power Loss: Damper Length

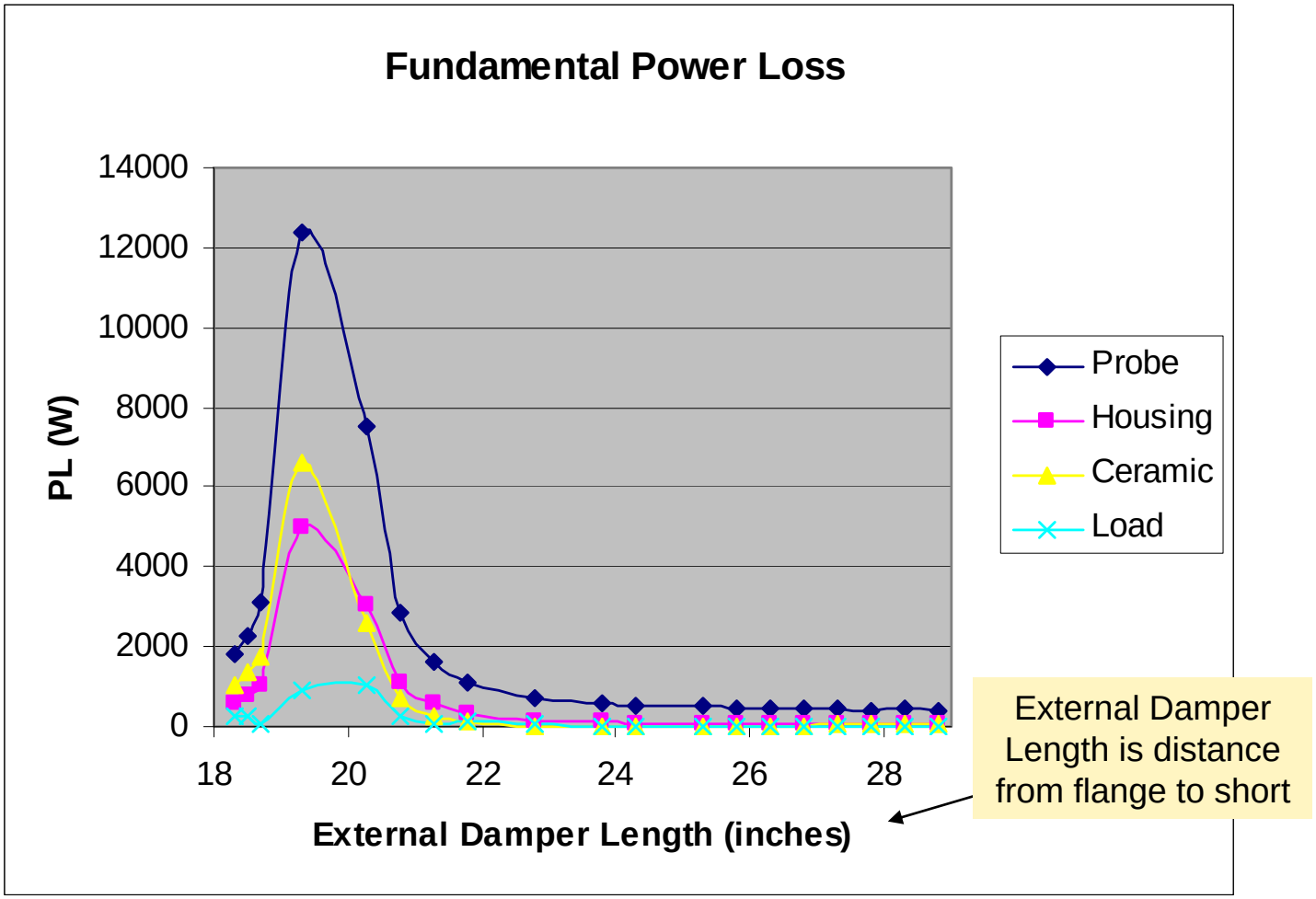

Damper Performance

- Current damper reduced Q from 45,000 to 2900 according to simulation.
- Redesigned damper reduces Q to 3100 with the same insertion depth into the cavity.

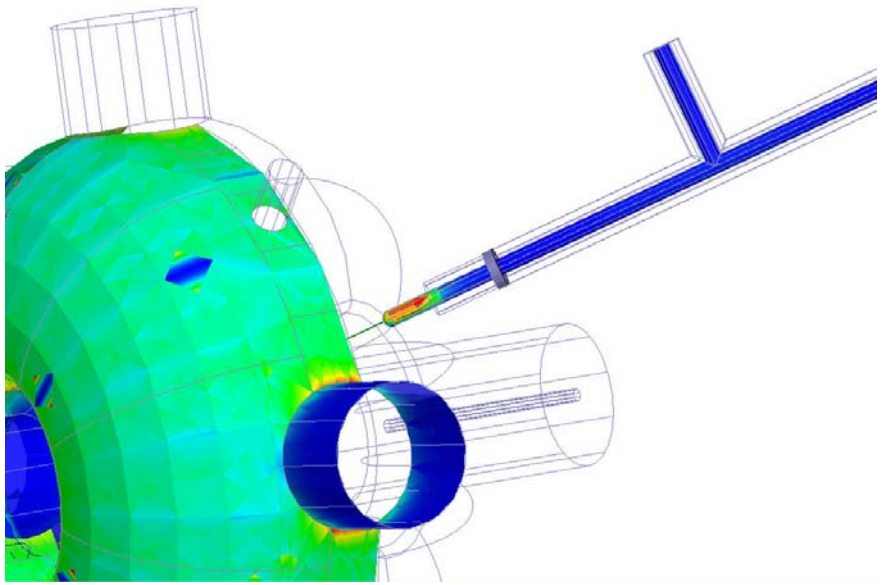

Fundamental mode power loss on cavity / damper surfaces

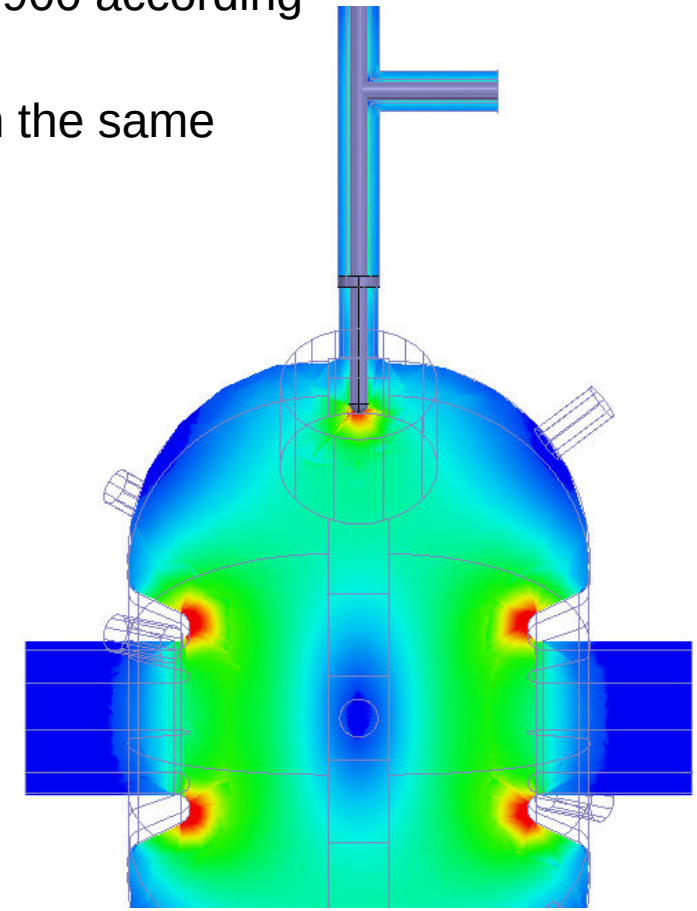

Electric field levels at 540 MHz

352 MHz Electric Field Along Axis

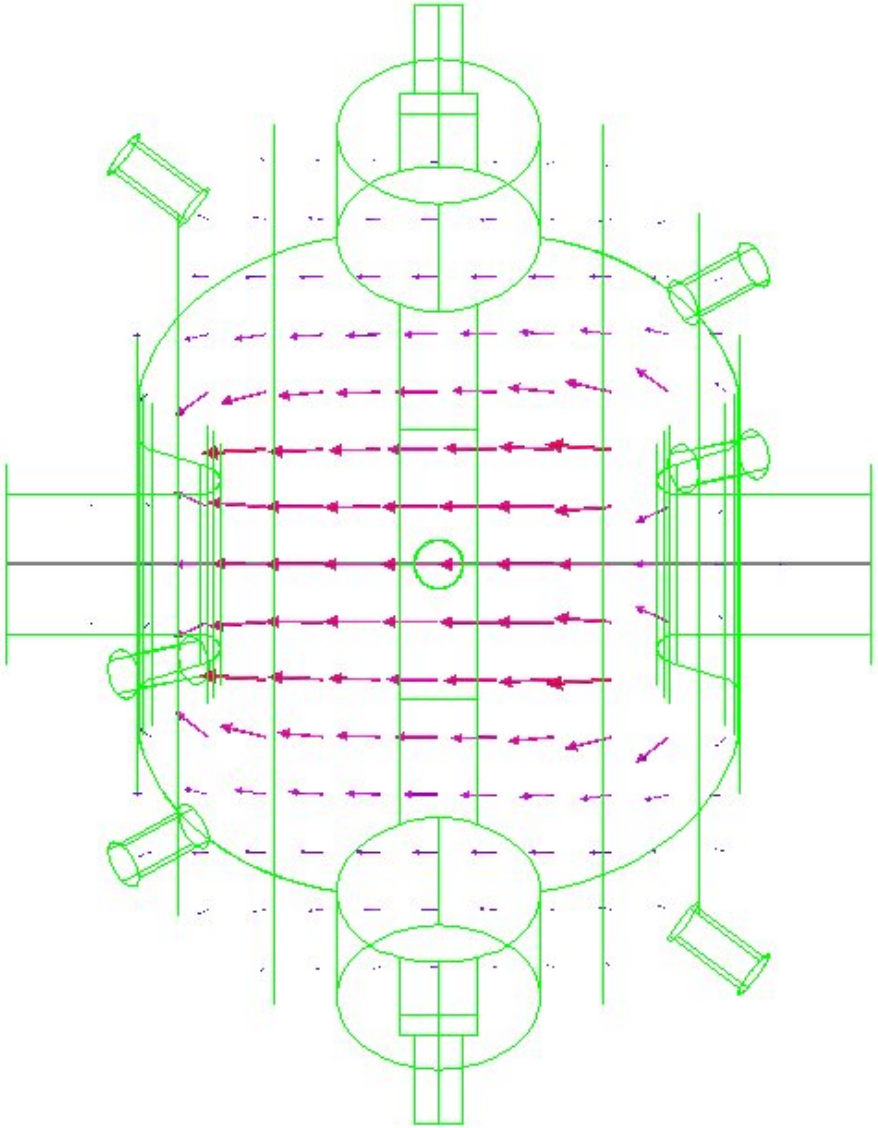

540 MHz Electric Field in Transverse Plane

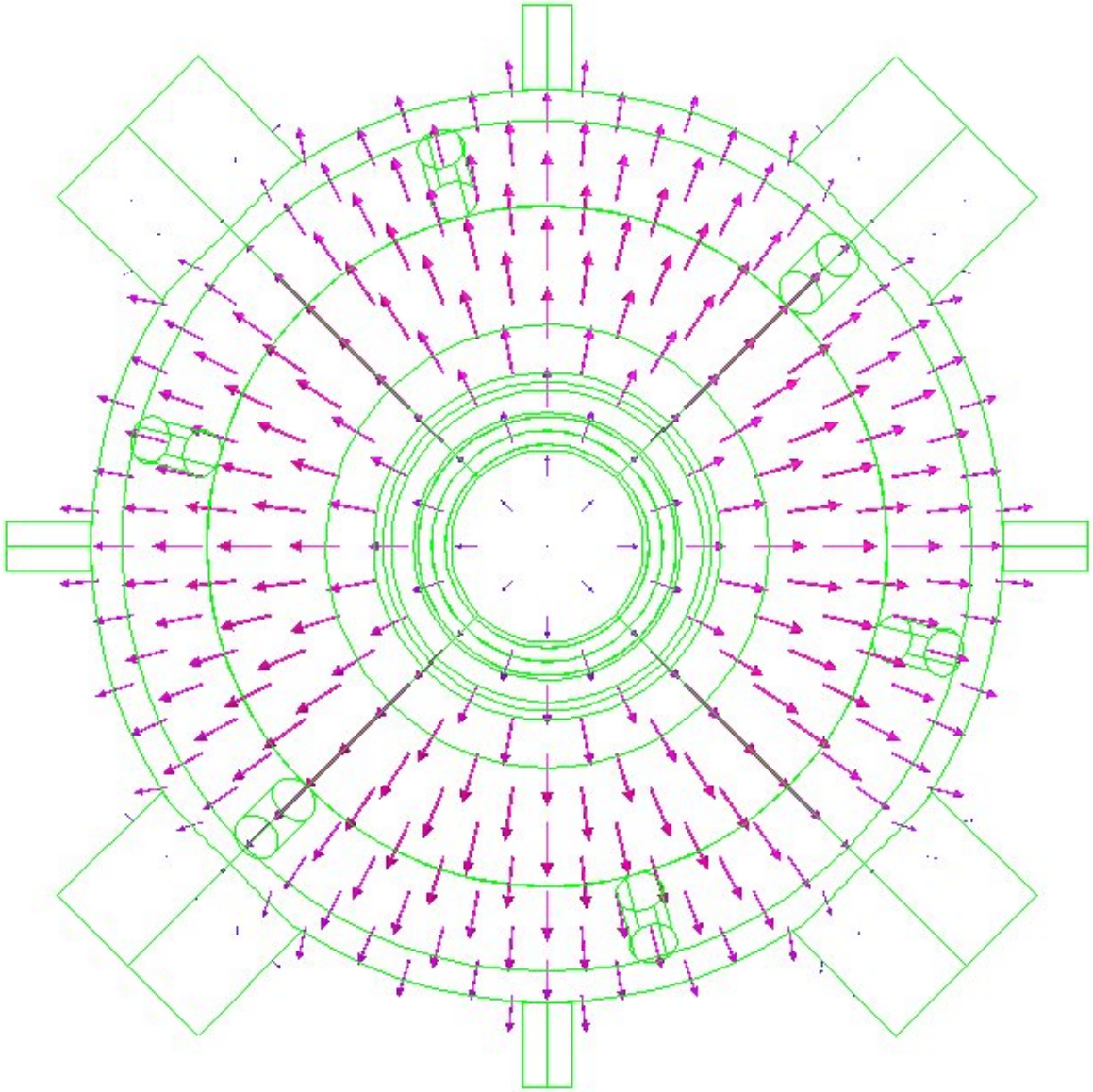
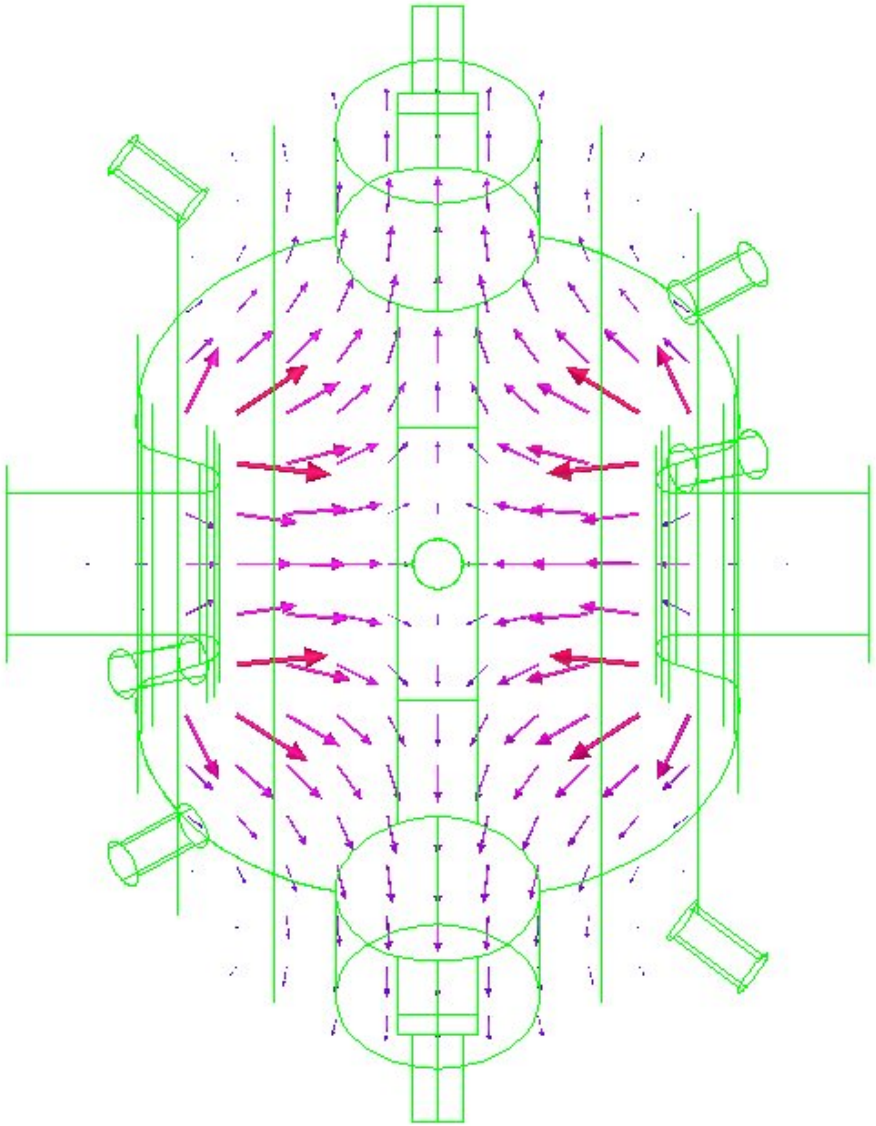
540 MHz Electric Field Along Axis