Argonne NATIONAL LABORATORY

... for a brighter future

SR Dampers

Geoff Waldschmidt

12/4/09

U.S. Department of Energy

UChicago Argonne LLC

Office of Science
U.S. DEPARTMENT OF ENERGY

A U.S. Department of Energy laboratory managed by UChicago Argonne, LLC

HOM Damper Design Goals

- Damp HOM's in order to permit 200mA beam operation.
- Create compact design for installation in SR cavities.
- Reject fundamental mode.
- Damper must be mechanically capable of handling heat load when SR cavity wall losses are 100kW (@352MHz).
- Copper stresses should not exceed 50MPa (7.25kpsi)
- RF diagnostics for characterizing HOM's.
- Detachable rf load.

Impedance Spectrum

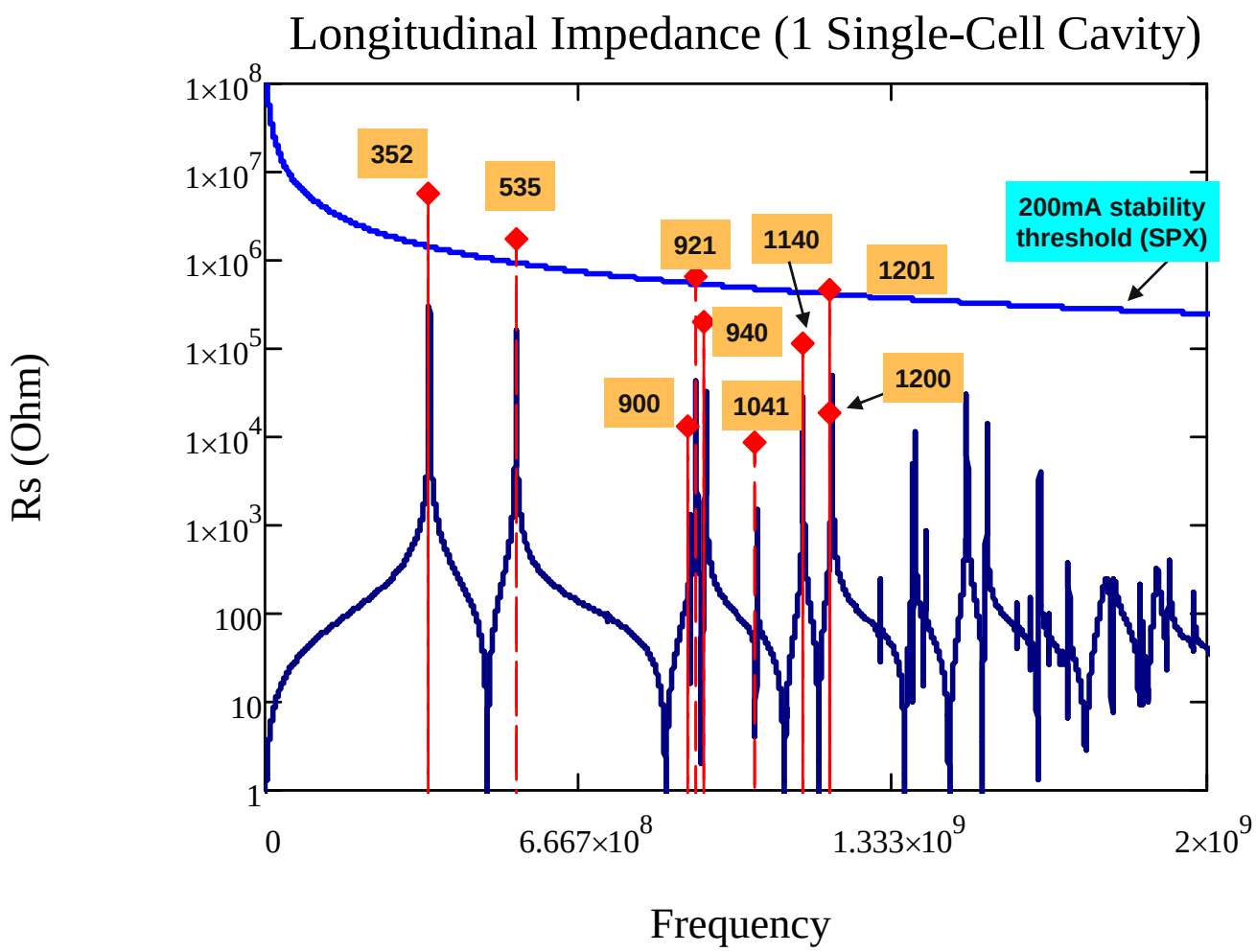

S38 E-Field Damper / H-field Damper

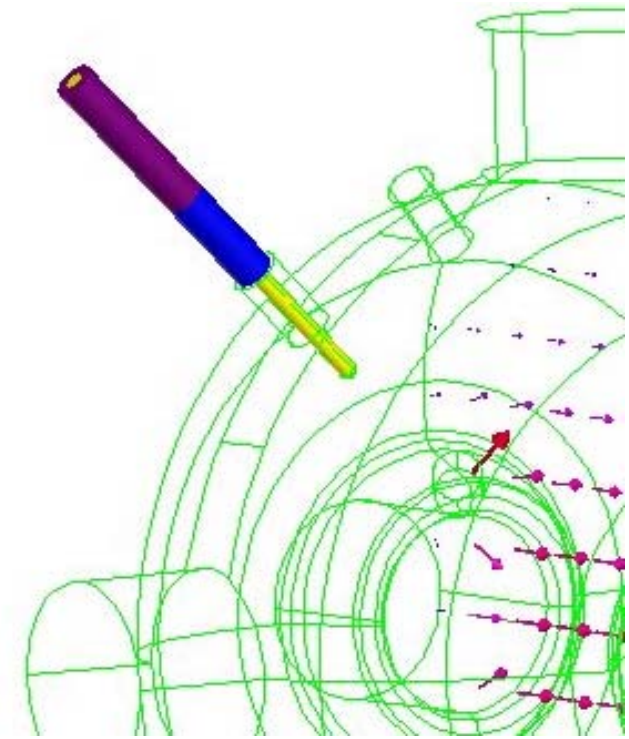

E-field damper in Sector 38

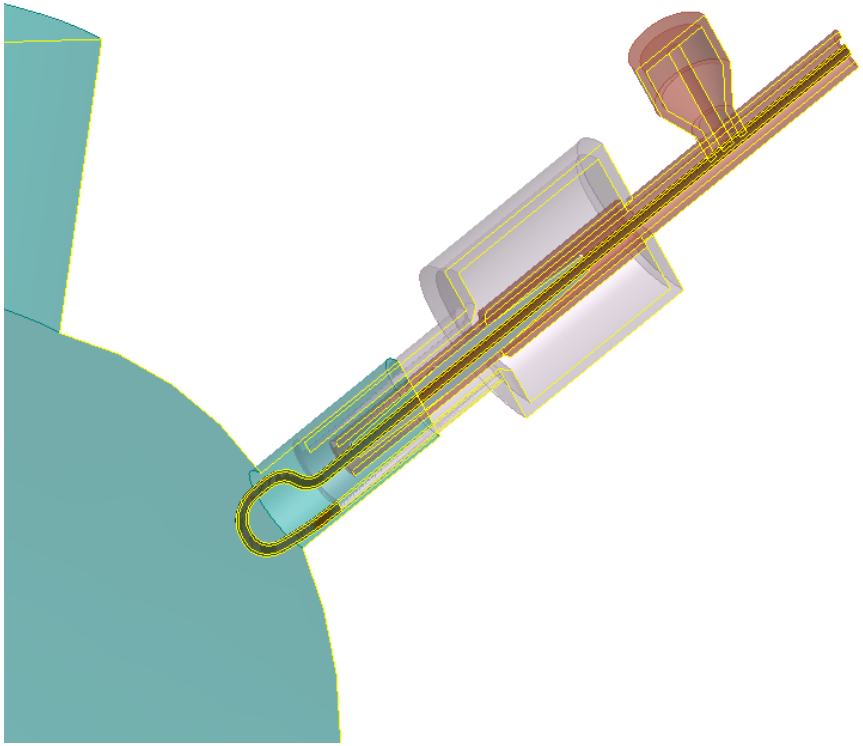

H-field damper

Damper Cross-Section

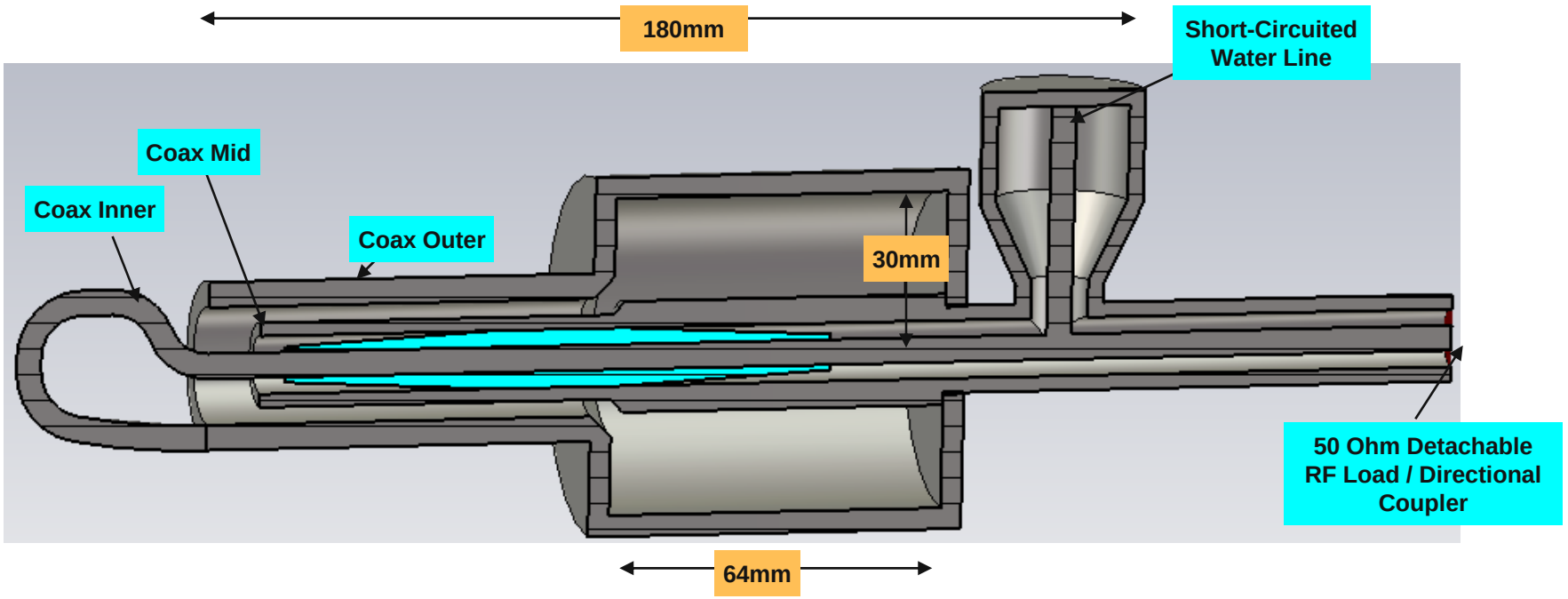

HOM's H-field (921MHz / 940MHz)

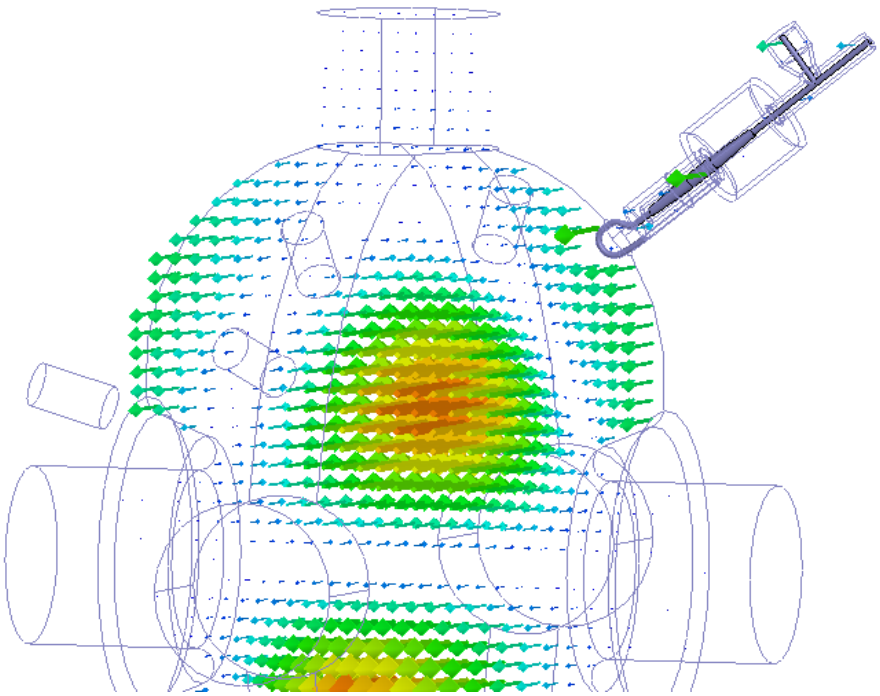

921MHz

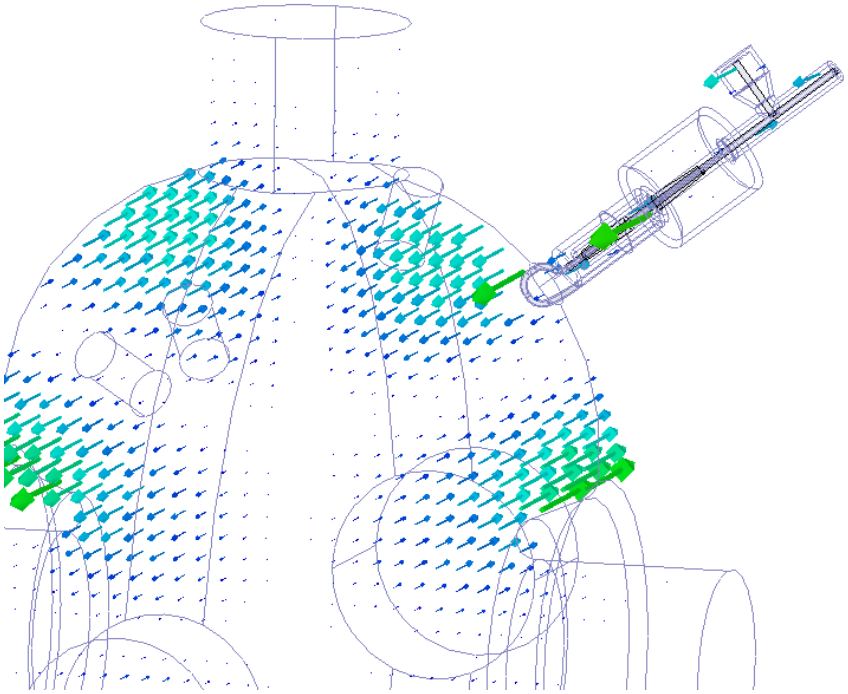

940MHz

352MHz H-field

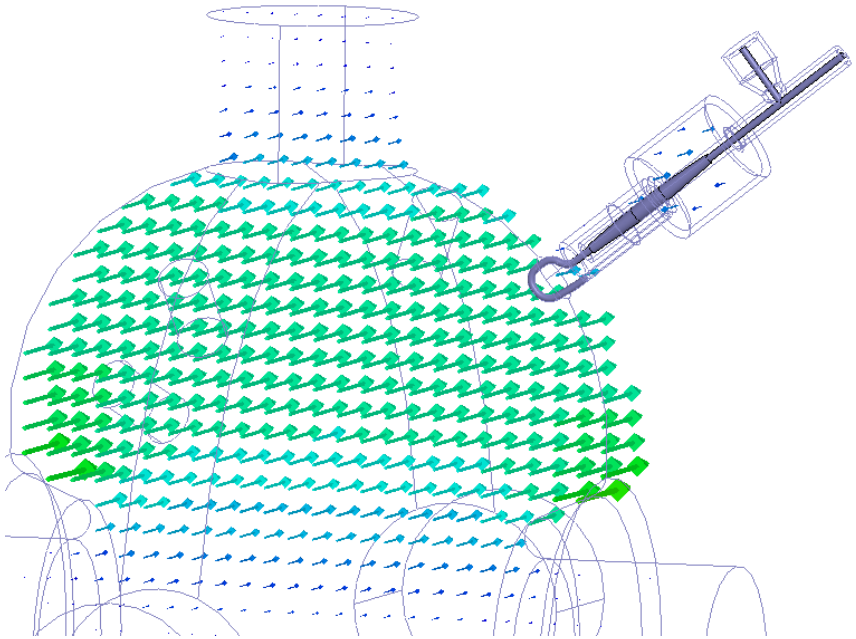

H-field Vector

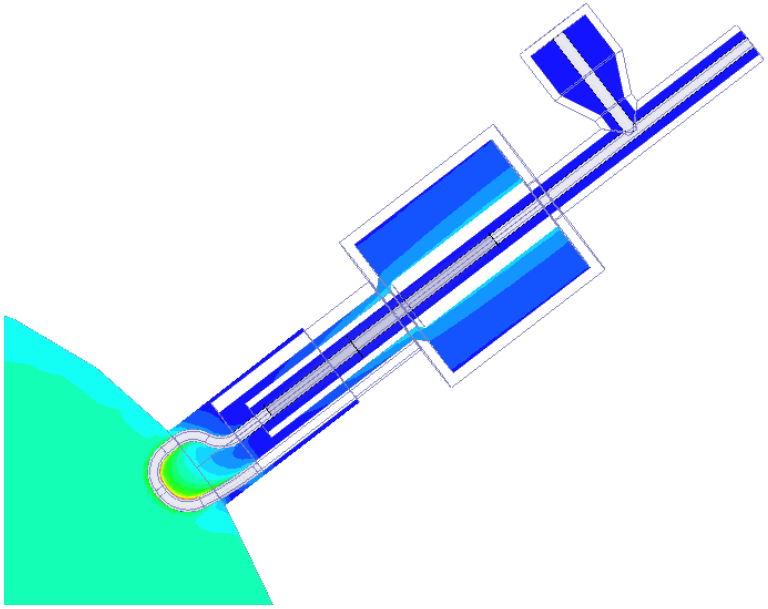

H-field magnitude

Smith Chart

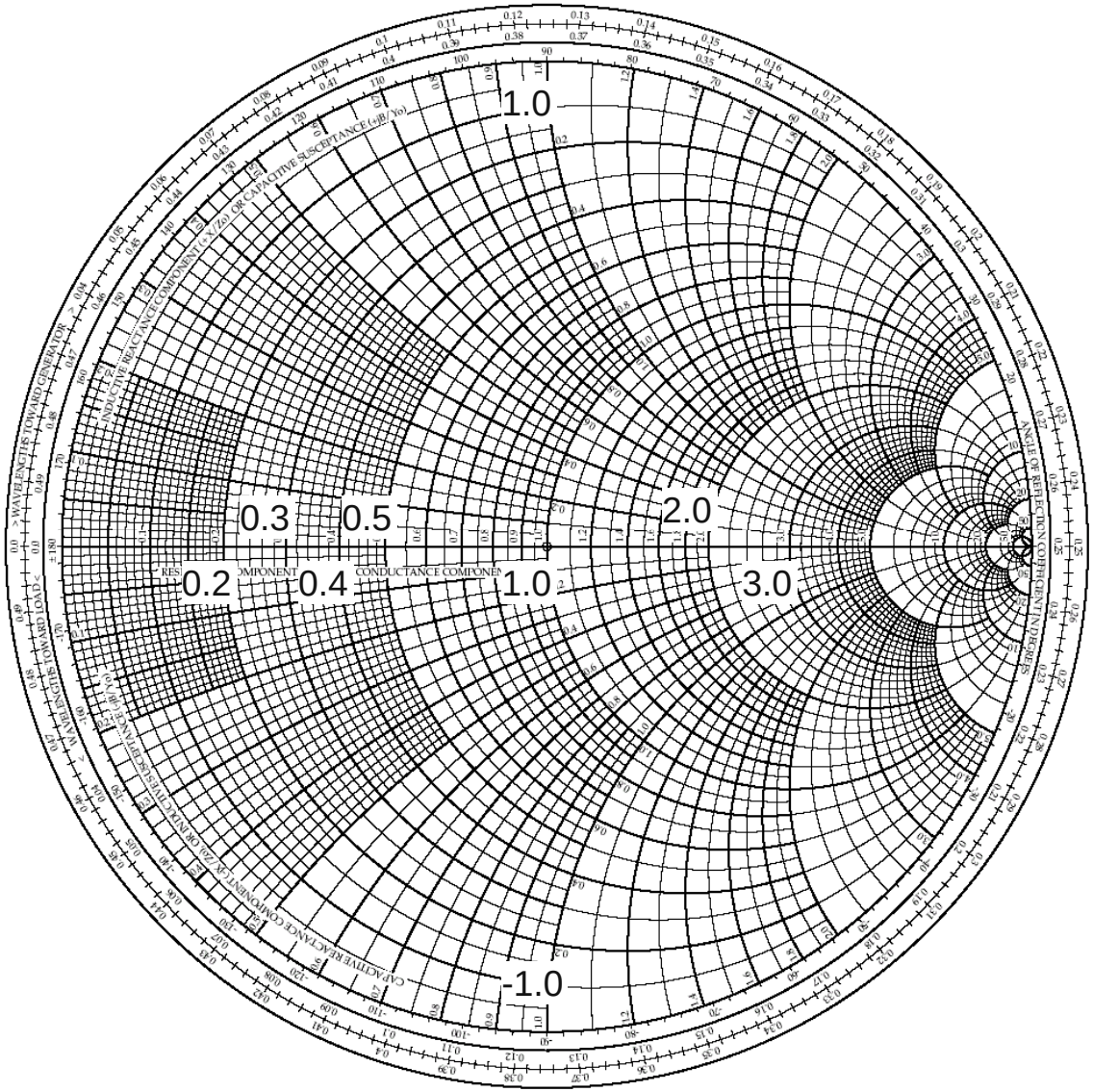

Smith Chart Matching Element Rotations

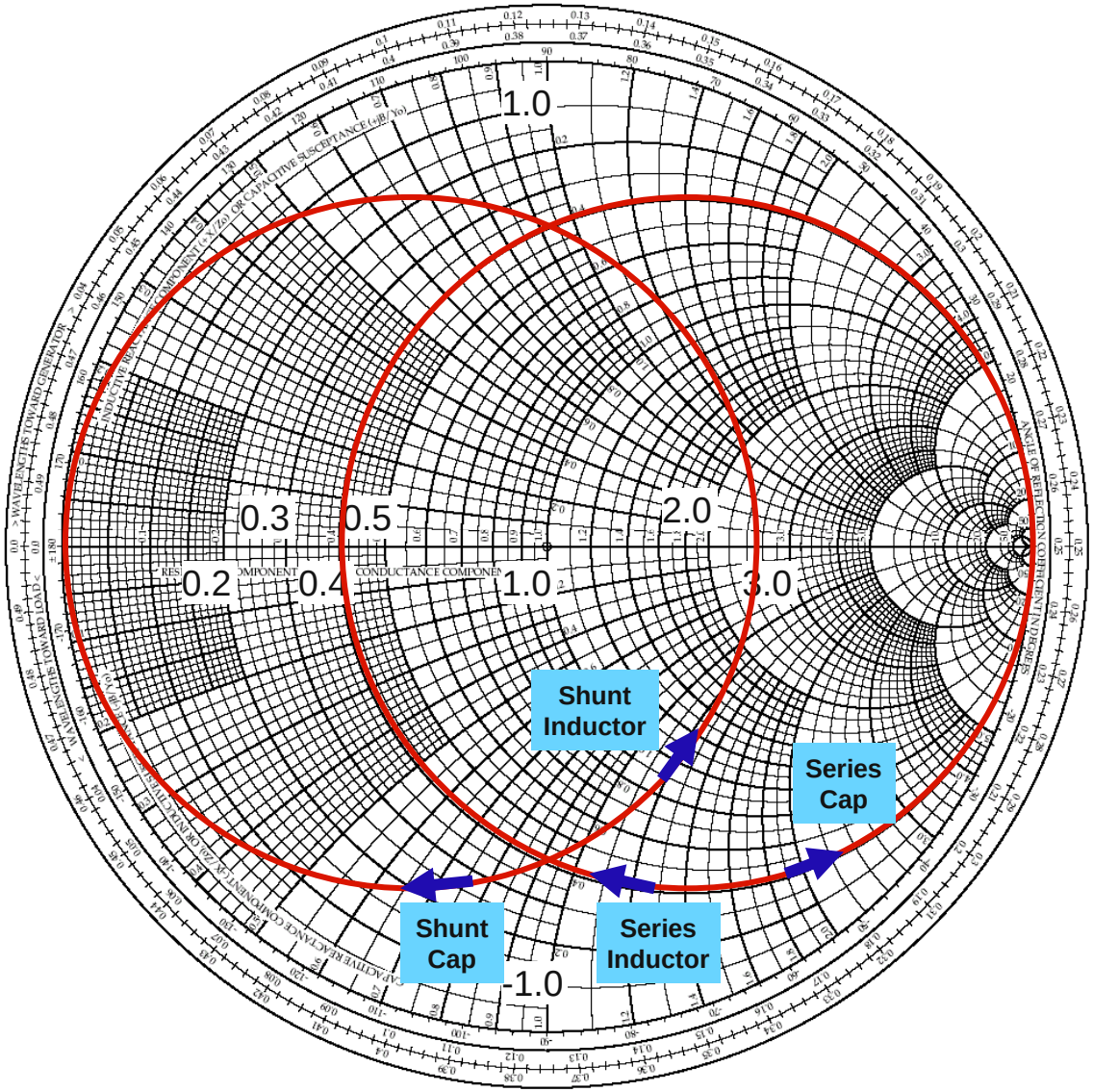

Matching Circuit Using Lumped Elements

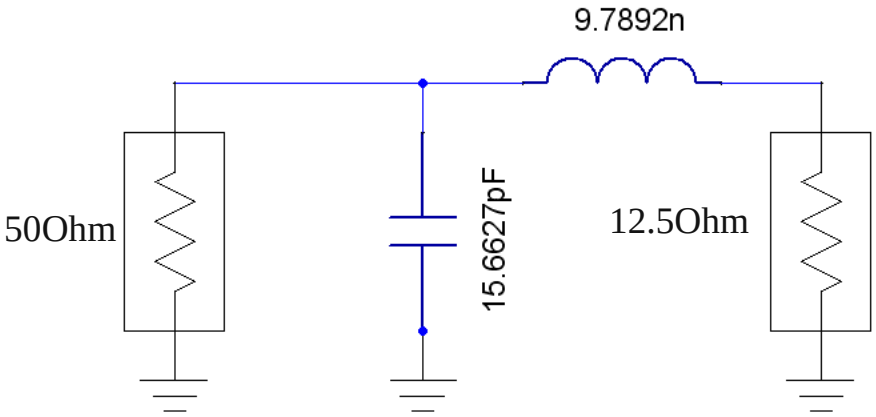

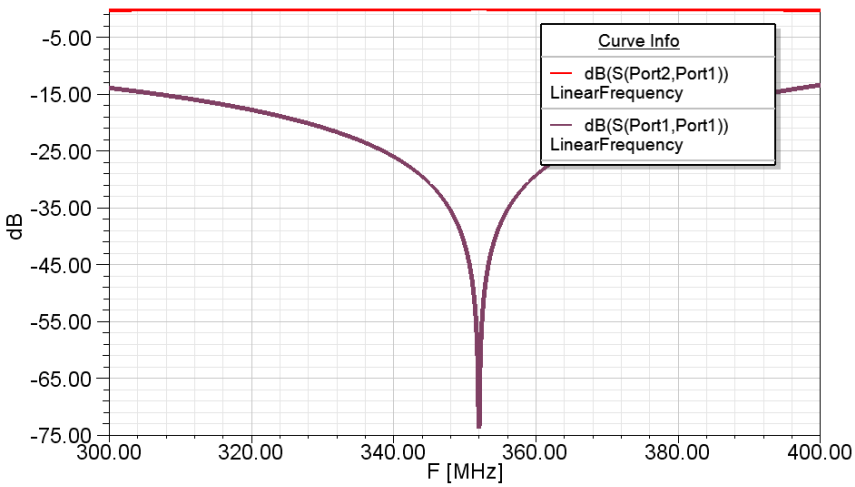

Return Loss

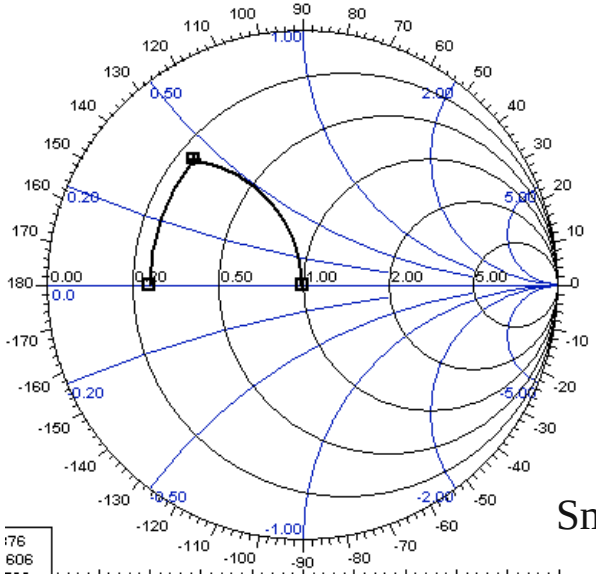

Smith Chart Match

Matching Circuit Using Lumped Elements

Z_{in} =
50 Ohm

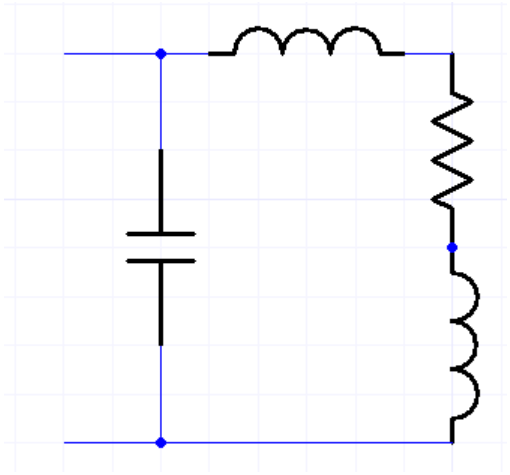

Z_L= 0.2 + j0.2

Z_{in} =
50 Ohm

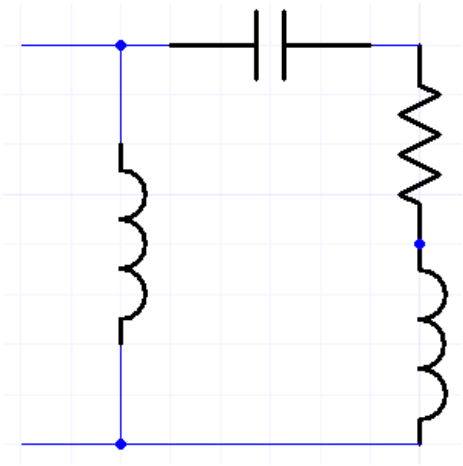

Z_L= 0.2 + j0.2

Matching Circuit Using Distributed Elements

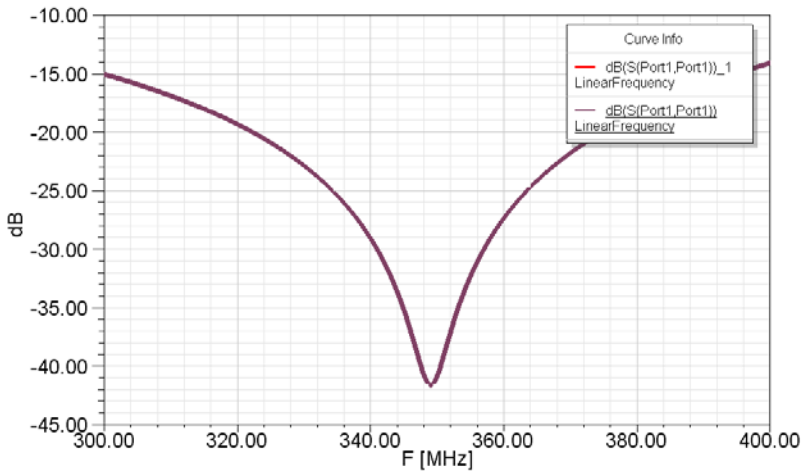

Return Loss

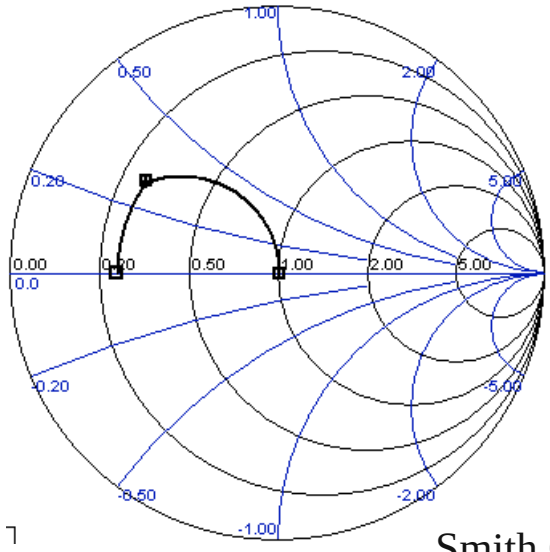

Smith Chart
Match

Damper RF Loading: 100kW Cavity Wall Losses at 352MHz

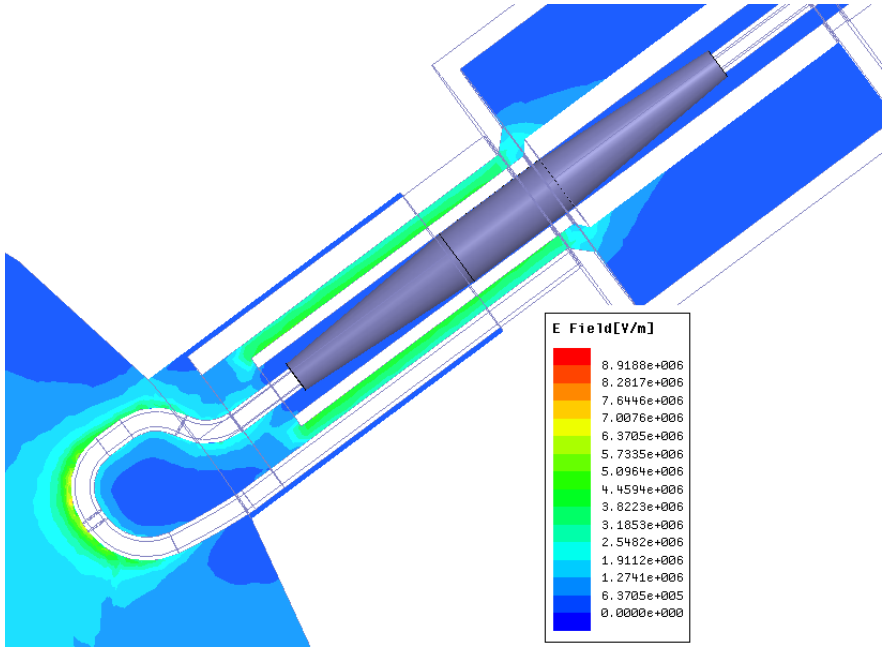

E-field

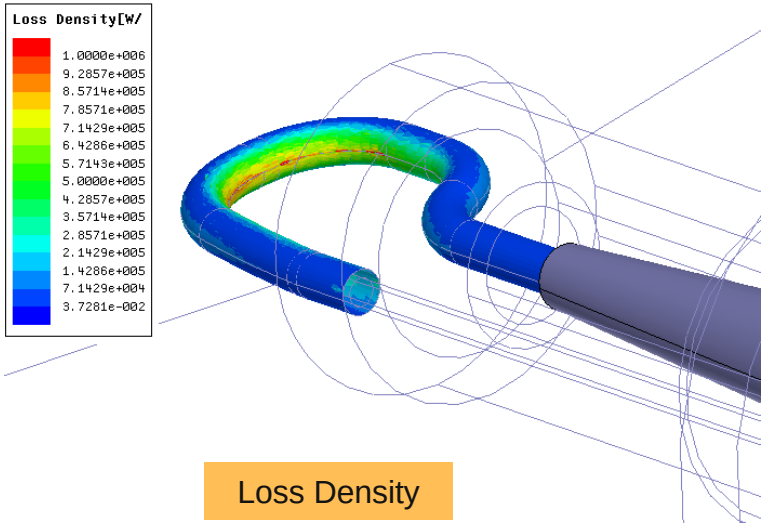

Loss Density

Boundary	Total Ansoft Loss	Scaling Factor
i_COAX_OUTER	318.508	3.22872
i_COAX_MID	428.921	1.69106
i_COAX_INNER	239.119	3.26114

Mechanical Results

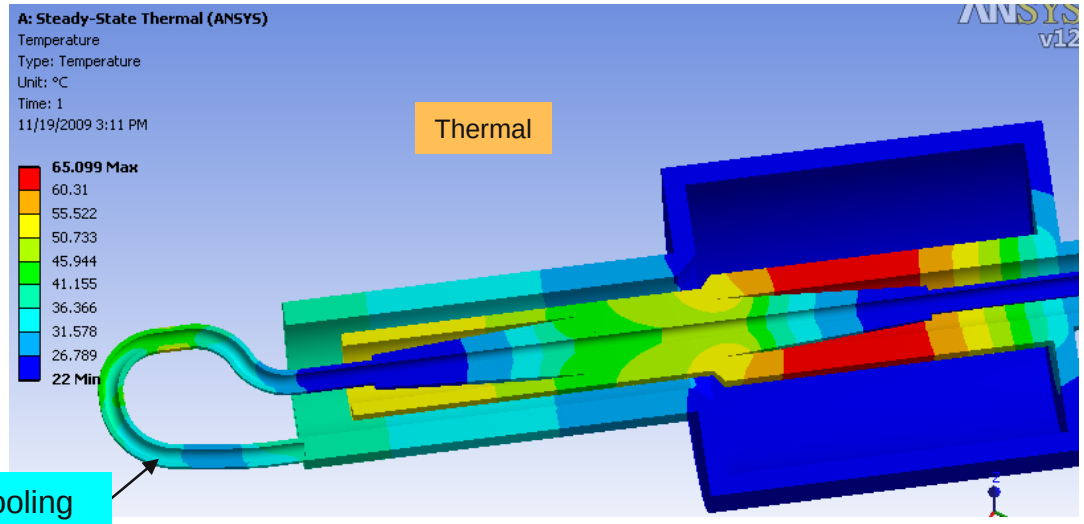
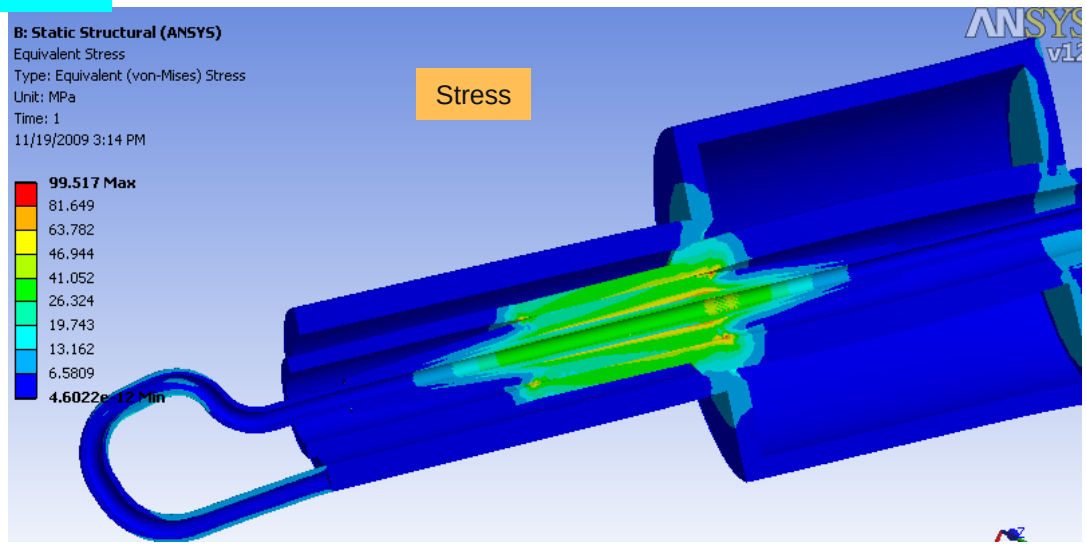
Cooling Channel